# INSTALLATION MANUAL

BF031-BK-T
BF031-WE-T

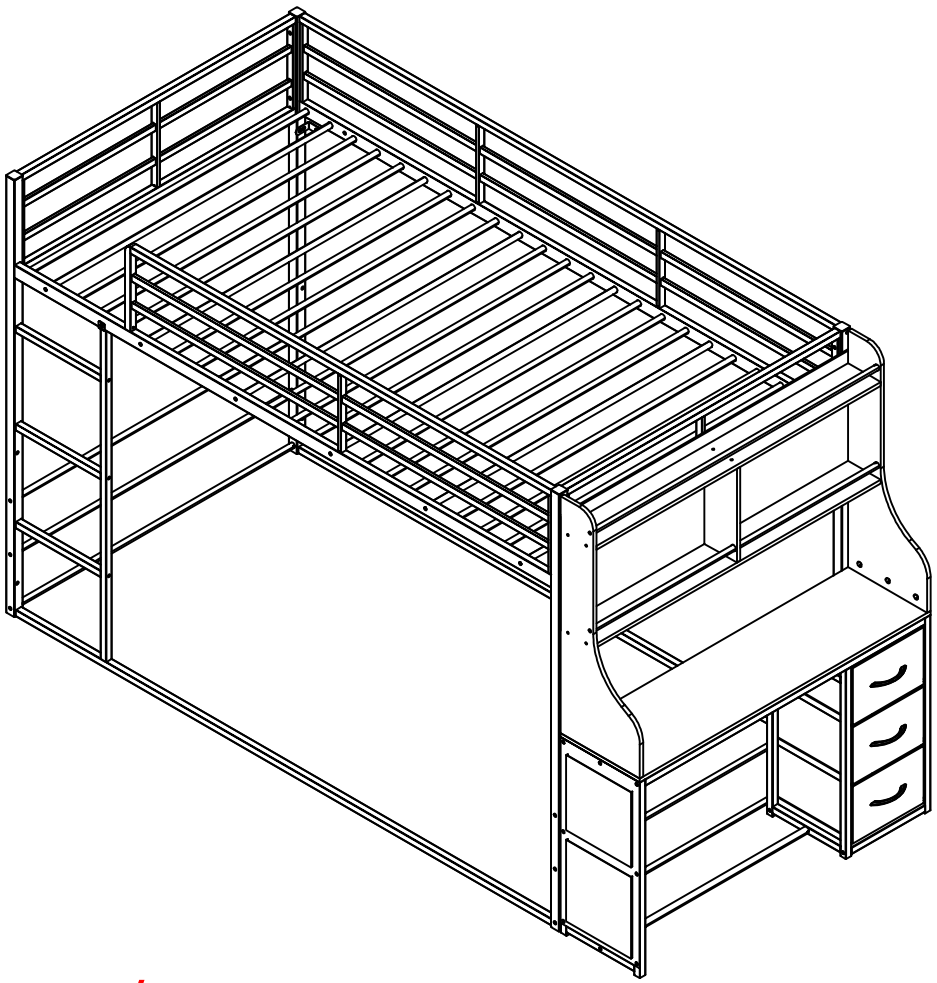

*support@fusou.vip*

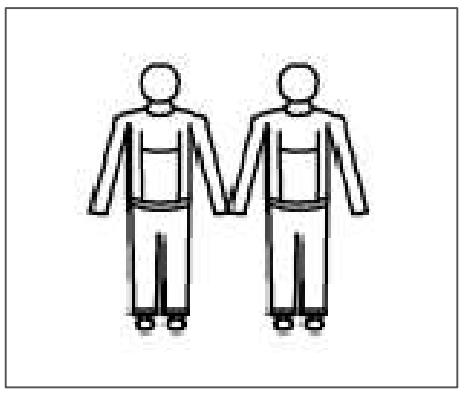

Two-person installation

# NOTICE

IMPORTANT, RETAIN FOR FUTURE REFERENCE: READ CAREFULLY
WICHTIG, FÜR SPÄTERE NACHSCHLAGE AUFBEWAHREN: SORGFÄLTIG LESEN
IMPORTANTE, GUARDAR PARA REFERENCIA FUTURA: LEER ATENTAMENTE
IMPORTANTE, CONSERVARE PER RIFERIMENTI FUTURI: LEGGERE ATTENTAMENTE
IMPORTANT, À CONSERVER POUR RÉFÉRENCE FUTURE : LIRE ATTENTIVEMENT

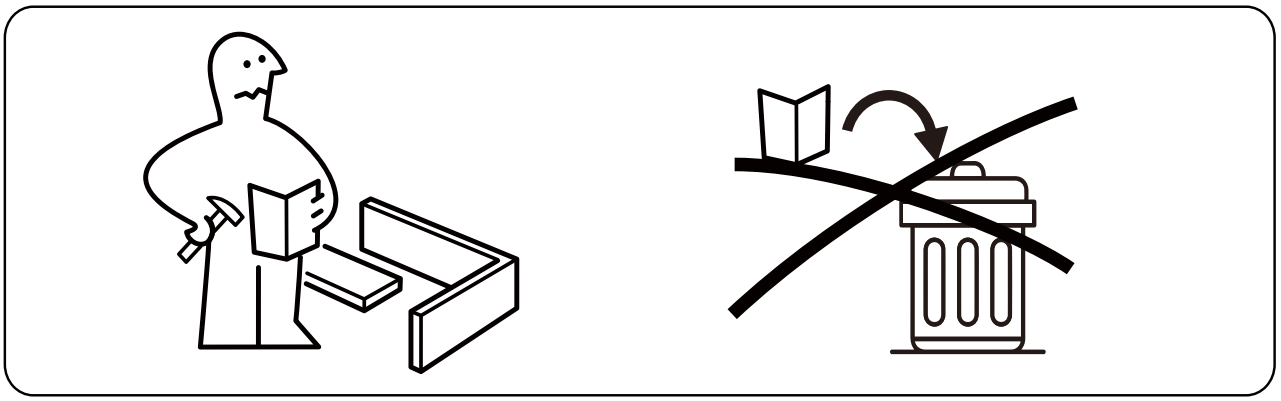

Assemble on a flat, clean and soft surface.
Auf einer flachen, sauberen und weichen Oberfläche zusammenbauen.
Assembler sur une surface plate, propre et douce.
Assemblare su una superficie piatta, pulita e morbida.
Ensamblar sobre una superficie plana, limpia y suave.

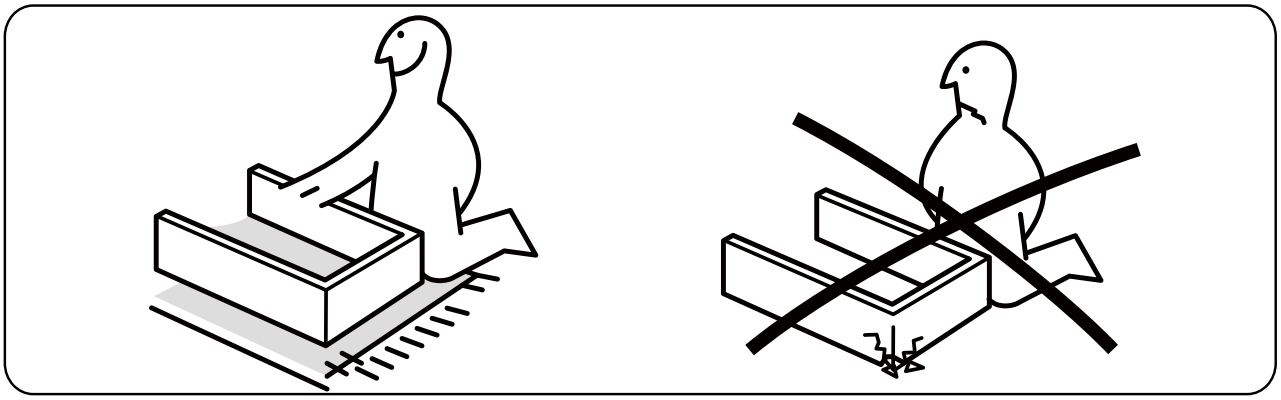

Professional installation is highly recommended.
Eine professionelle Installation wird dringend empfohlen.
Une installation professionnelle est fortement recommandée.
Si raccomanda vivamente l'installazione professionale.
Se recomienda altamente la instalación profesional.



Periodically check that all components are tightly secured.
Überprüfen Sie Regelmäßig, Dass Alle Komponenten Fest Gesichert Sind.
Vérifiez Périodiquement Que Tous Les Composants Sont Bien Fixés.
Controllare Periodicamente Che Tutti I Componenti Siano Ben Fissati.
Verifique Periódicamente Que Todos Los Componentes Estén Bien Asegurados.

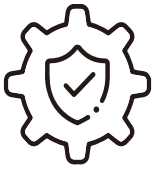

First, fasten the screw to the product panel through the round hole of the fitting. Next, drill a hole in the wall and insert the fitting into the hole. Finally, pass the long screw through the round hole of the fitting and screw it into the expansion tube.

Zuerst befestigen Sie die Schraube durch das runde Loch des Befestigungsteils an der Geräteverkleidung. Dann bohren Sie ein Loch in die Wand und stecken das Befestigungsteil in das Loch. Zum Schluss führen Sie die lange Schraube durch das runde Loch des Befestigungsteils und schrauben sie in das Dübelrohr ein.

Tout d'abord, fixez la vis sur le panneau du produit à travers le trou rond de la pièce accessoire. Ensuite, percez un trou dans le mur et insérez la pièce accessoire dans le trou. Enfin, passez la longue vis à travers le trou rond de la pièce accessoire et vissez-la dans le tube expansible.

Innanzitutto, fissare la vite sul pannello del prodotto attraverso il foro rotondo dell'accessorio. Successivamente, praticare un foro nel muro e inserire l'accessorio nel foro. Infine, far passare la vite lunga attraverso il foro rotondo dell'accessorio e avvitarla nel tubo di espansione.

En primer lugar, fije el tornillo al panel del producto a través del orificio redondo del accesorio. A continuación, perfore un agujero en la pared e inserte el accesorio en el agujero. Por último, pase el tornillo largo por el orificio redondo del accesorio y enróscalo en el tubo expansor.

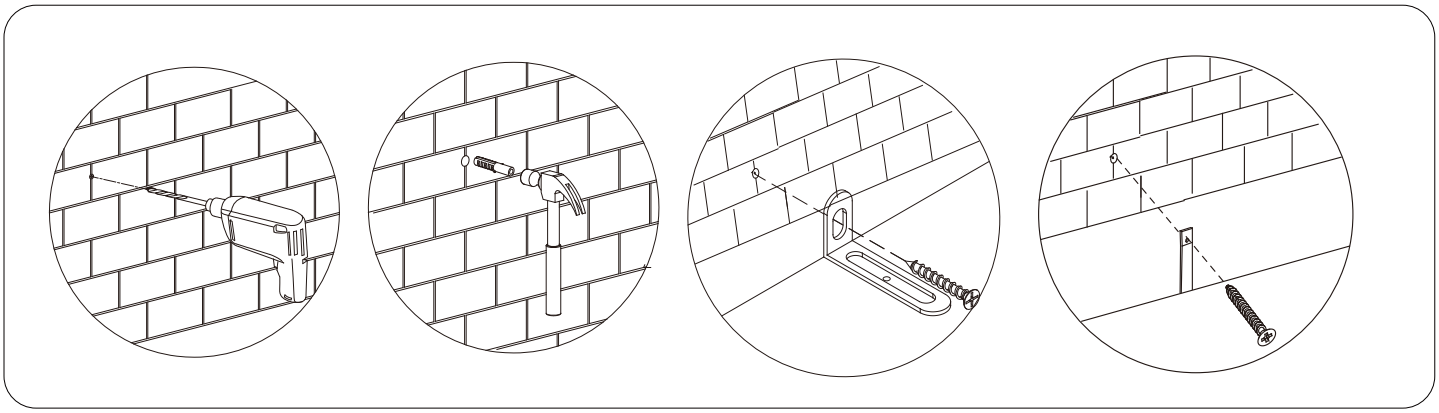

# EXPLODED VIEW

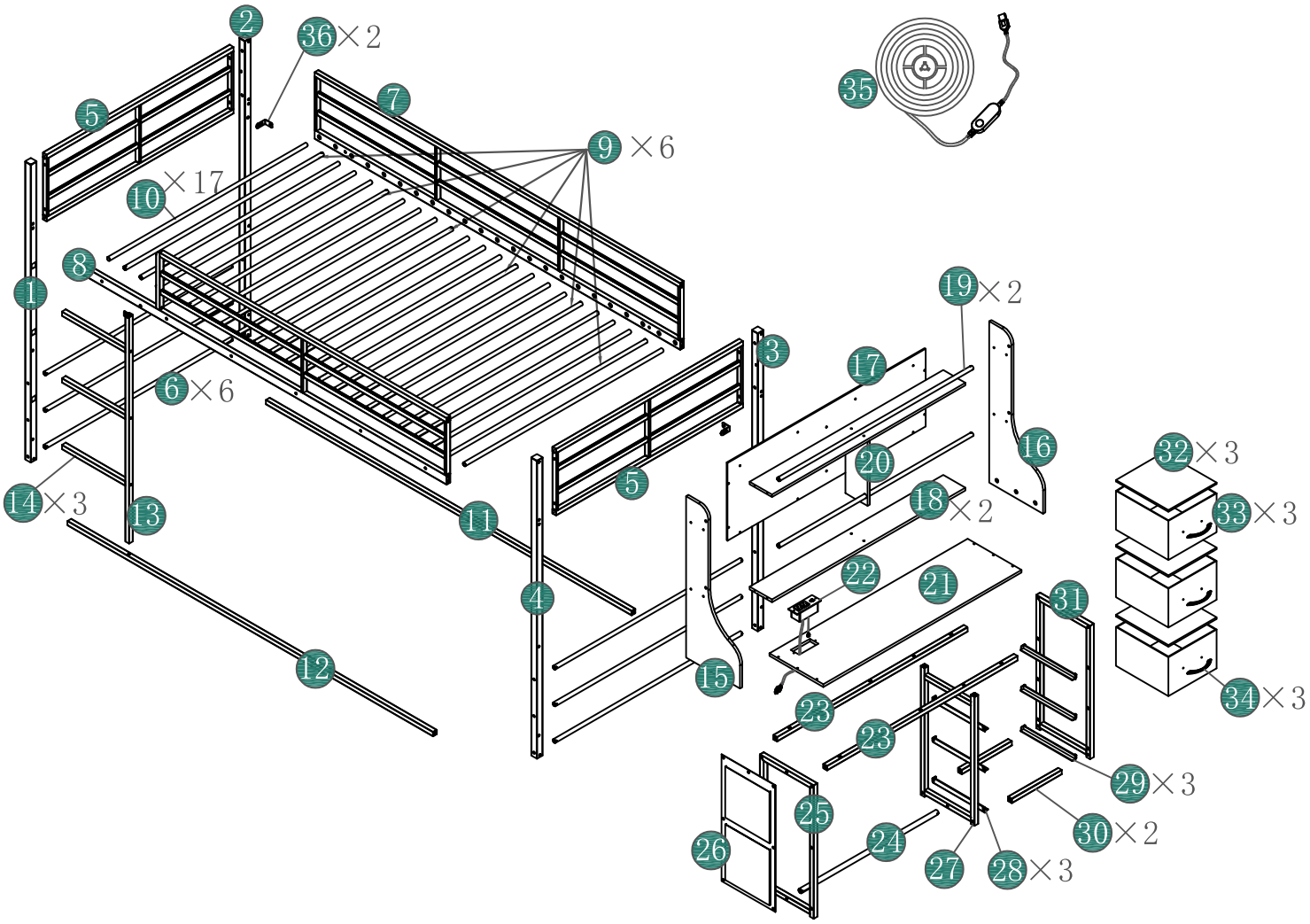


Friendly reminder: Before installation, arrange all the parts in order according to the exploded diagram's numbers and quantities, and make sure all screws and tools are ready. Then, start the installation following the steps.

# PARTS

| Item no.<br>Nr.<br>N°d'article<br>Articolo No.<br>Artículo No. | Reference Image<br>Referenzbild<br>Image de référence<br>Immagine di riferimento<br>Imagen de referencia | Qty.<br>Menge<br>Qté.<br>Qtà<br>Cant. |
|---|---|---|
| 1 | 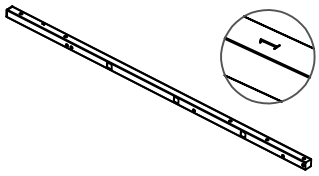 | ×1 |
| 2 | 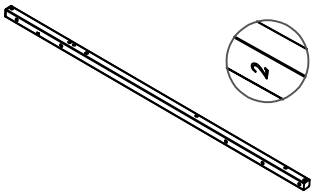 | ×1 |
| 3 | 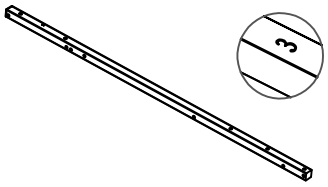 | ×1 |
| 4 | 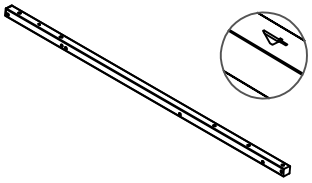 | ×1 |
| 5 | 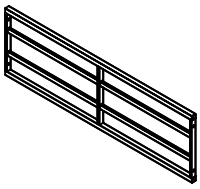 | ×2 |
| 6 | 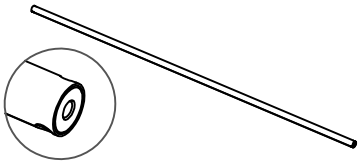 | ×6 |
| 7 | 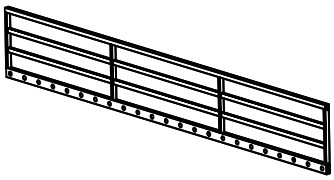 | ×1 |
| 8 | 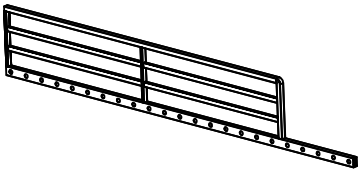 | ×1 |
| 9 | long<br> 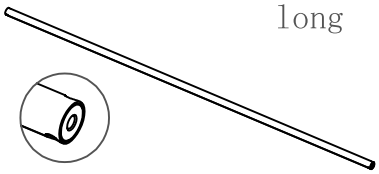 | ×6 |
| 10 | long<br> 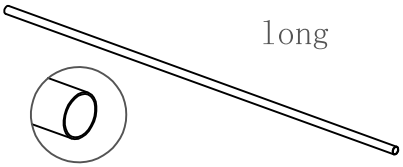 | ×17 |
| 11 | No holes<br> 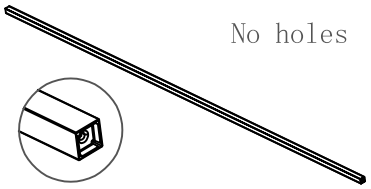 | ×1 |
| 12 | Perforated<br> 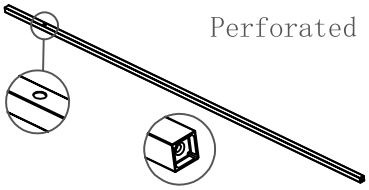 | ×1 |
| 13 | 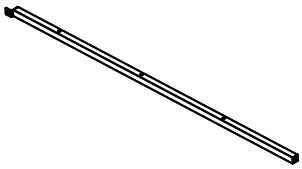 | ×1 |
| 14 | long<br> 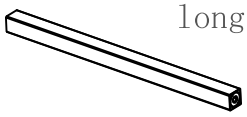 | ×3 |
| 15 | 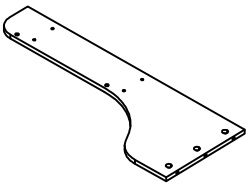 | ×1 |
| 16 | 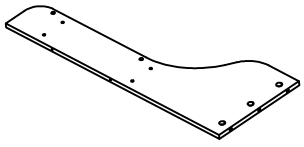 | ×1 |
| 17 | 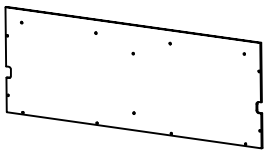 | ×1 |
| 18 | 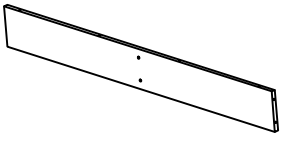 | ×2 |

# PARTS

| Item no. Nr. N°d'article Articolo No. Artículo No. | Reference Image Referenzbild Image de référence Immagine di riferimento Imagen de referencia | Qty. Menge Qté. Qtà Cant. |
|---|---|---|
| 19 | 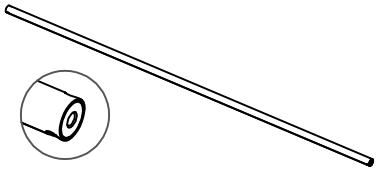 | ×2 |
| 21 | 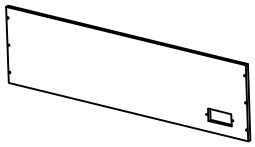 | ×1 |
| 23 | 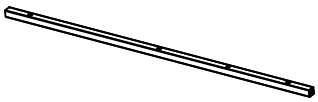 | ×2 |
| 25 | 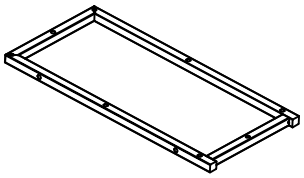 | ×1 |
| 27 | 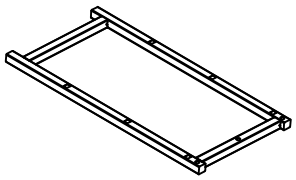 | ×1 |
| 29 | 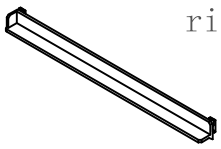 right | ×3 |
| 31 | 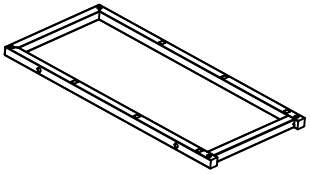 | ×1 |
| 33 | 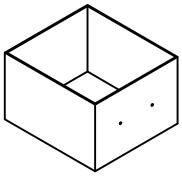 | ×3 |
| 35 | light bar  | ×1 |

| Item no. Nr. N°d'article Articolo No. Artículo No. | Reference Image Referenzbild Image de référence Immagine di riferimento Imagen de referencia | Qty. Menge Qté. Qtà Cant. |
|---|---|---|
| 20 | 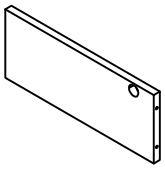 | ×1 |
| 22 | 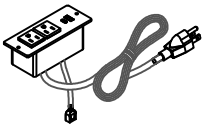 | ×1 |
| 24 | short 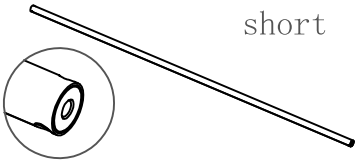 | ×1 |
| 26 | 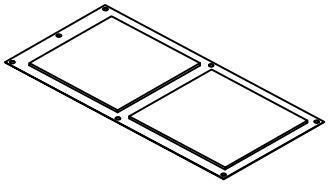 | ×1 |
| 28 | left 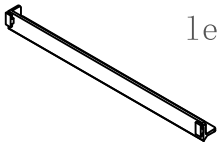 | ×3 |
| 30 | short 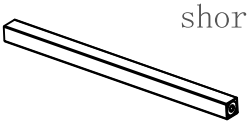 | ×2 |
| 32 | 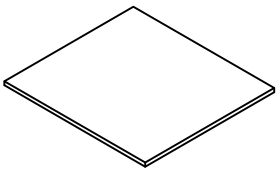 | ×3 |
| 34 | 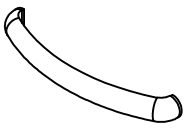 | ×3 |
| 36 | 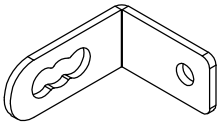 | ×2 |

| Item no. Nr. N°d'article Articolo No. Artículo No. | Reference Image Referenzbild Image de référence Immagine di riferimento Imagen de referencia | Qty. Menge Qté. Qtà Cant. |
|---|---|---|
| A | 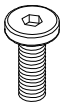 M6×15mm | X20 |
| B | 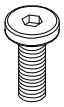 M6×25mm | ×12 |
| C | 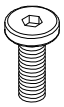 M6×28mm | ×6 |
| D | 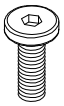 M6×35mm | X15 |
| E | 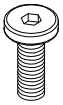 M6×45mm | ×31 |
| F | 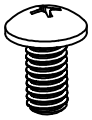 M4×8mm | ×6 |
| G |  st4×8mm | ×2 |
| H | 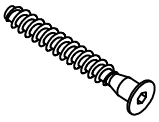 Colored zinc M5×35mm | ×26 |
| I |  M6×50mm | ×2 |
| J | 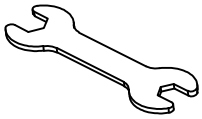 10#, 13# | ×1 |
| K |  3# | ×1 |
| L |  4# | ×1 |
| M |  φ15×9mm | ×6 |
| N | 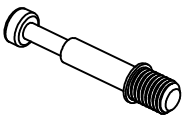 M6×8×35mm | ×6 |
| O | 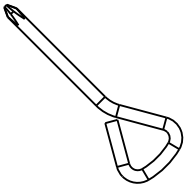 | ×1 |

# ASSEMBLY

**1**

M6×25mm #4



B 4pcs L 1pc

Pay attention to the direction of the pipe during installation; the pipe material has left and right sides.

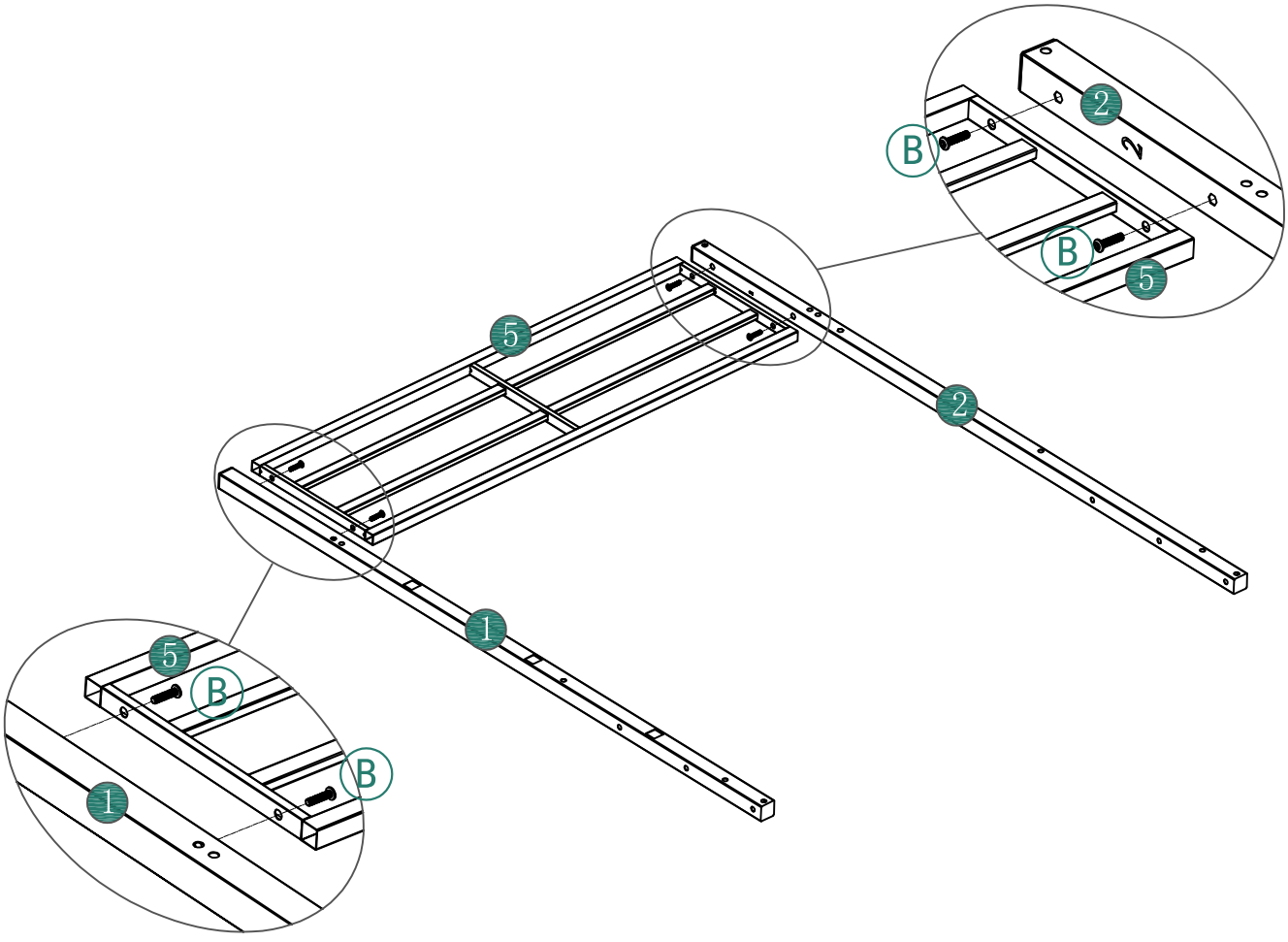


Screw lock 80%

**2**

M6×45mm #4



Ⓔ 6pcs Ⓛ 1pc

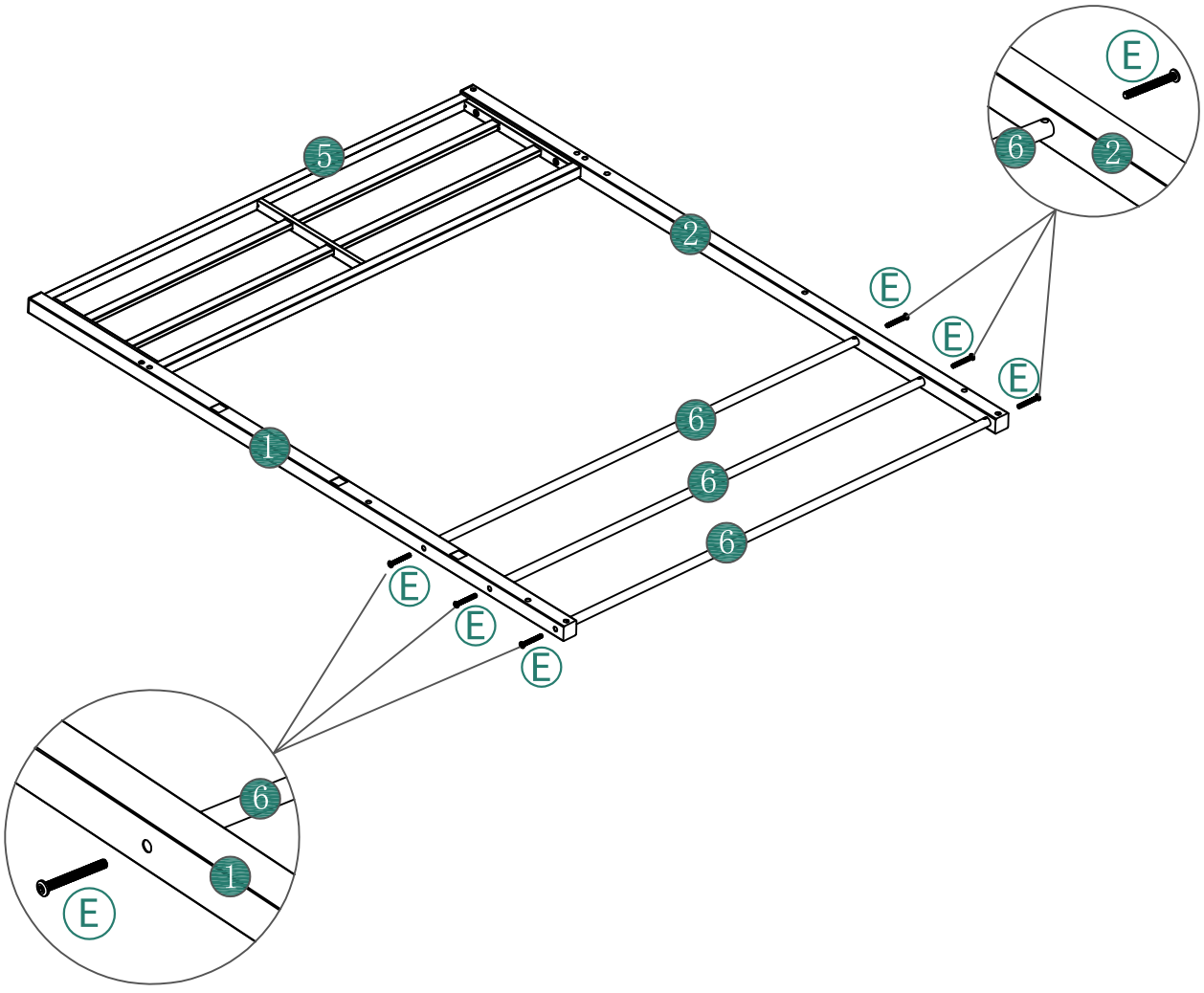


Screw lock 80%

3

M6×25mm



B 4pcs

#4

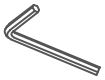

L 1pc

Pay attention to the direction of the pipe during installation; the pipe material has left and right sides.

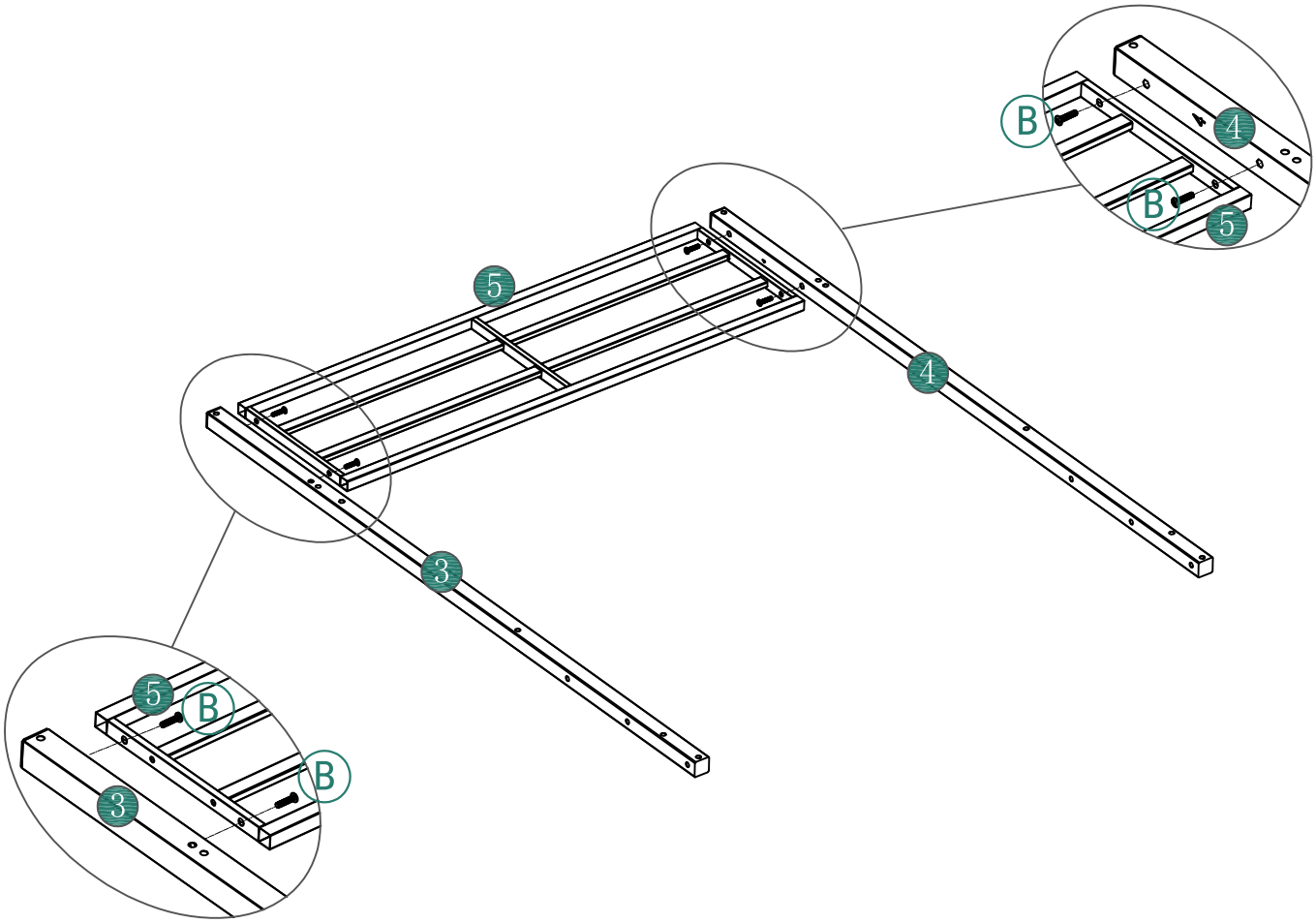


Screw lock 80%

# 4

M6×45mm #4



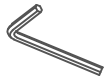

E 6pcs L 1pc

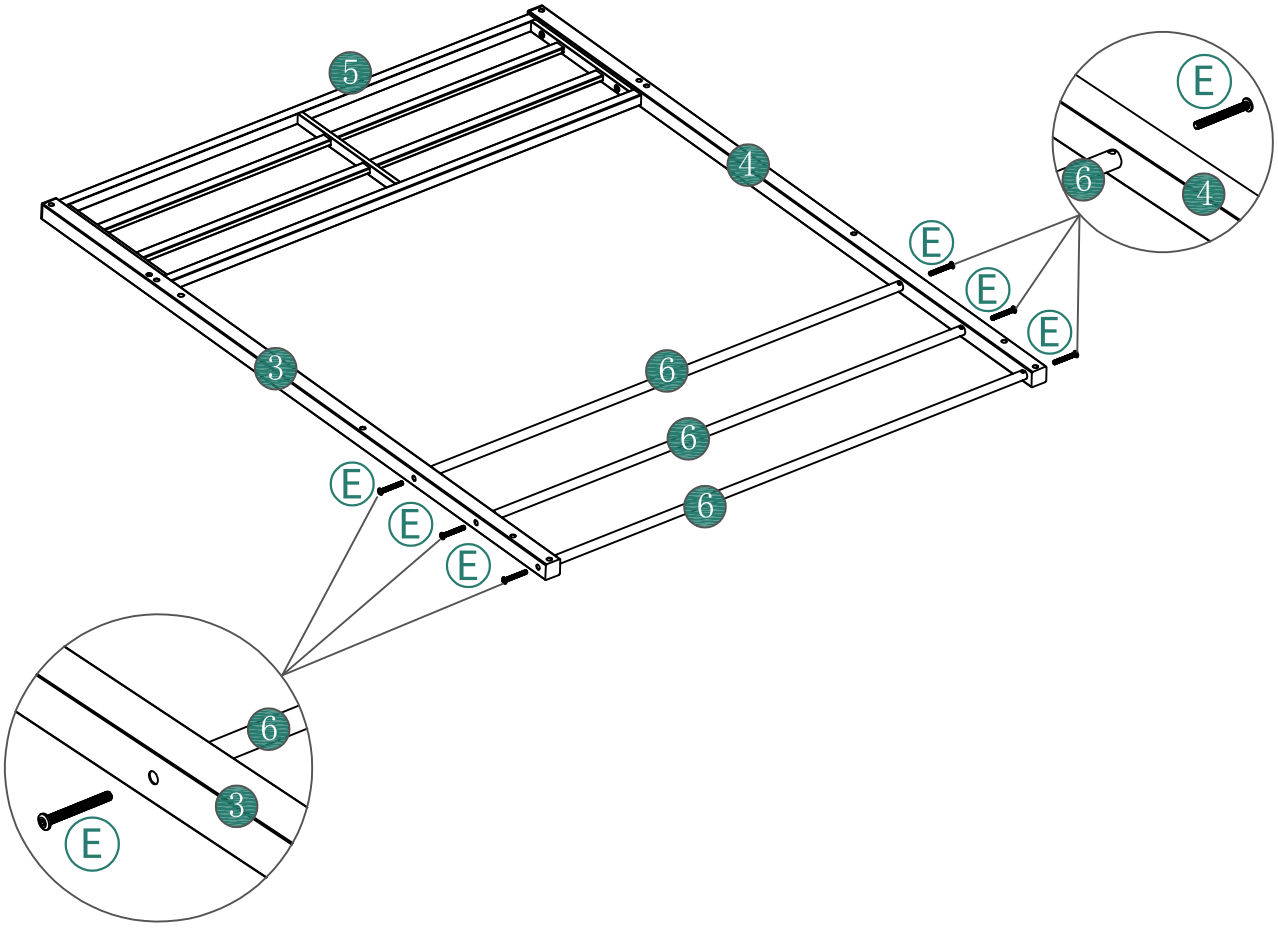


Screw lock 80%

# 5

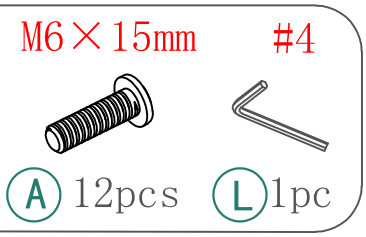


Insert parts 9 and 10 into the corresponding holes of part 7, as shown in the diagram. Once inserted, arrange parts 9 and 10 neatly, then place part 8 as shown. Starting from one side, slowly insert parts 9 and 10 into the holes of part 8. Make sure parts 9 and 10 don't come out during installation. After they are fully inserted, push parts 7 and 8 inward at the same time following the arrows, so parts 9 and 10 are completely inside the holes, then just tighten the screws on both sides.

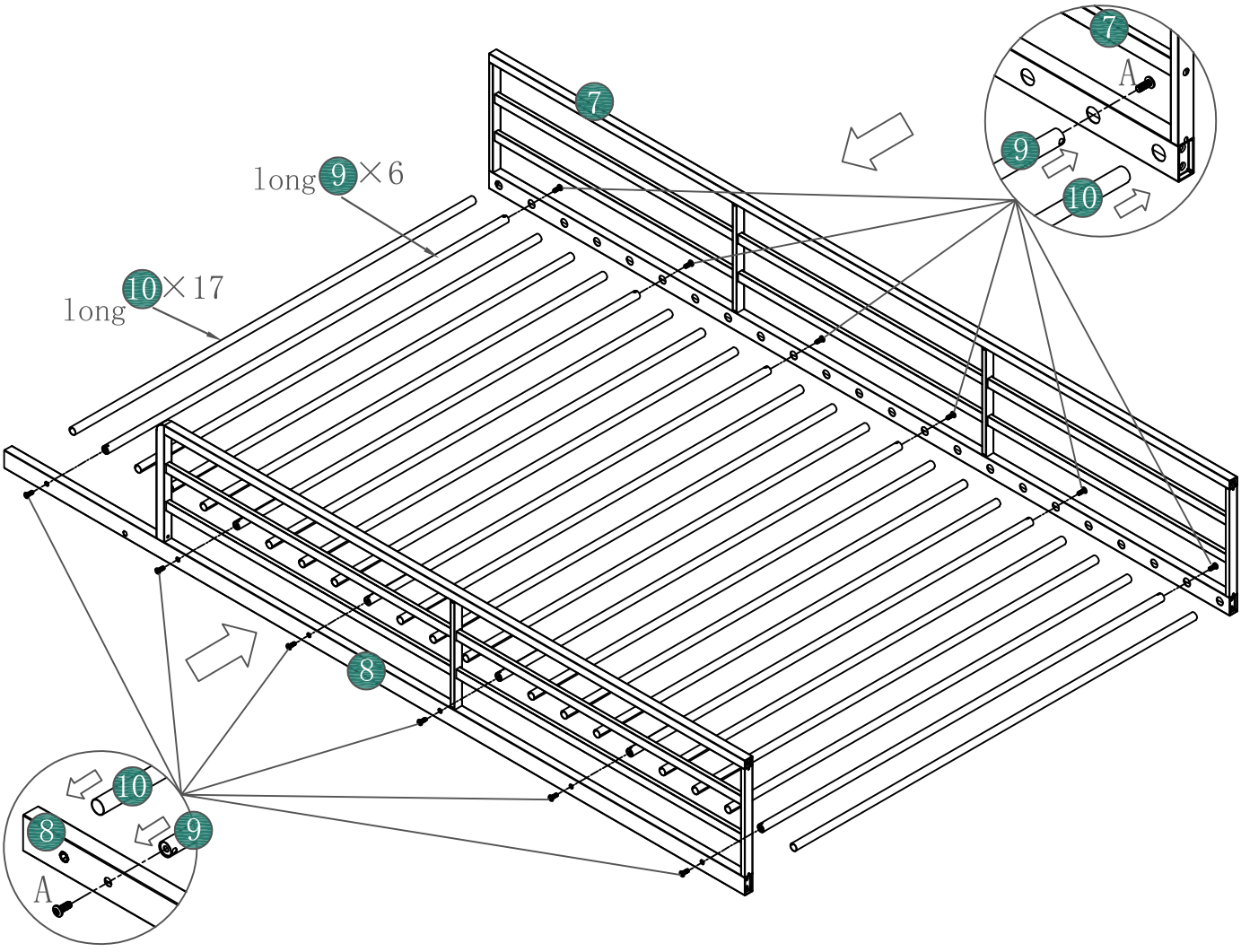


Screw lock 80%

# 6

M6×45mm #4

E 8pcs L 1pc

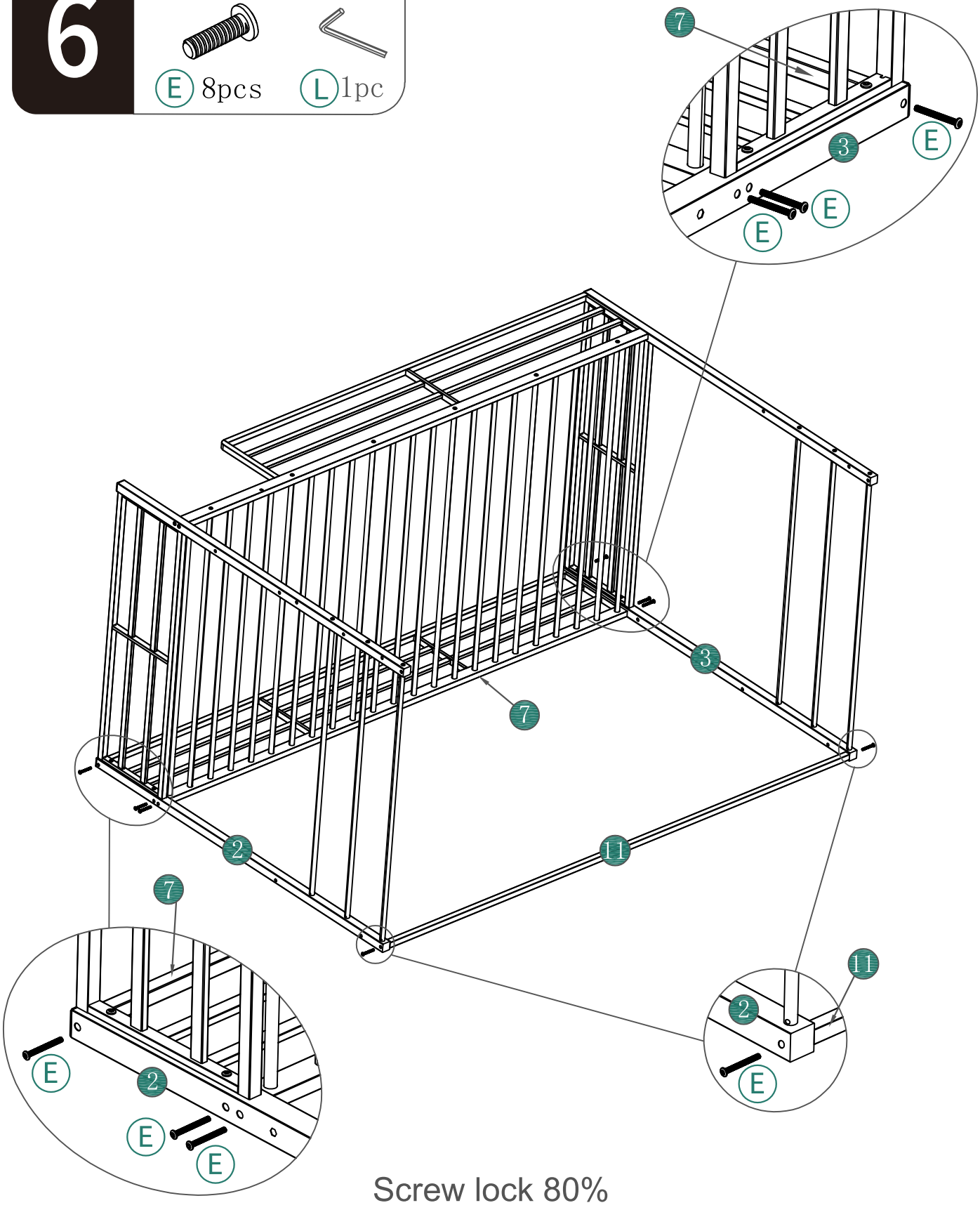


Screw lock 80%

# 7

M6×15mm M6×45mm #4

A 3pcs E 5pcs L 1pc

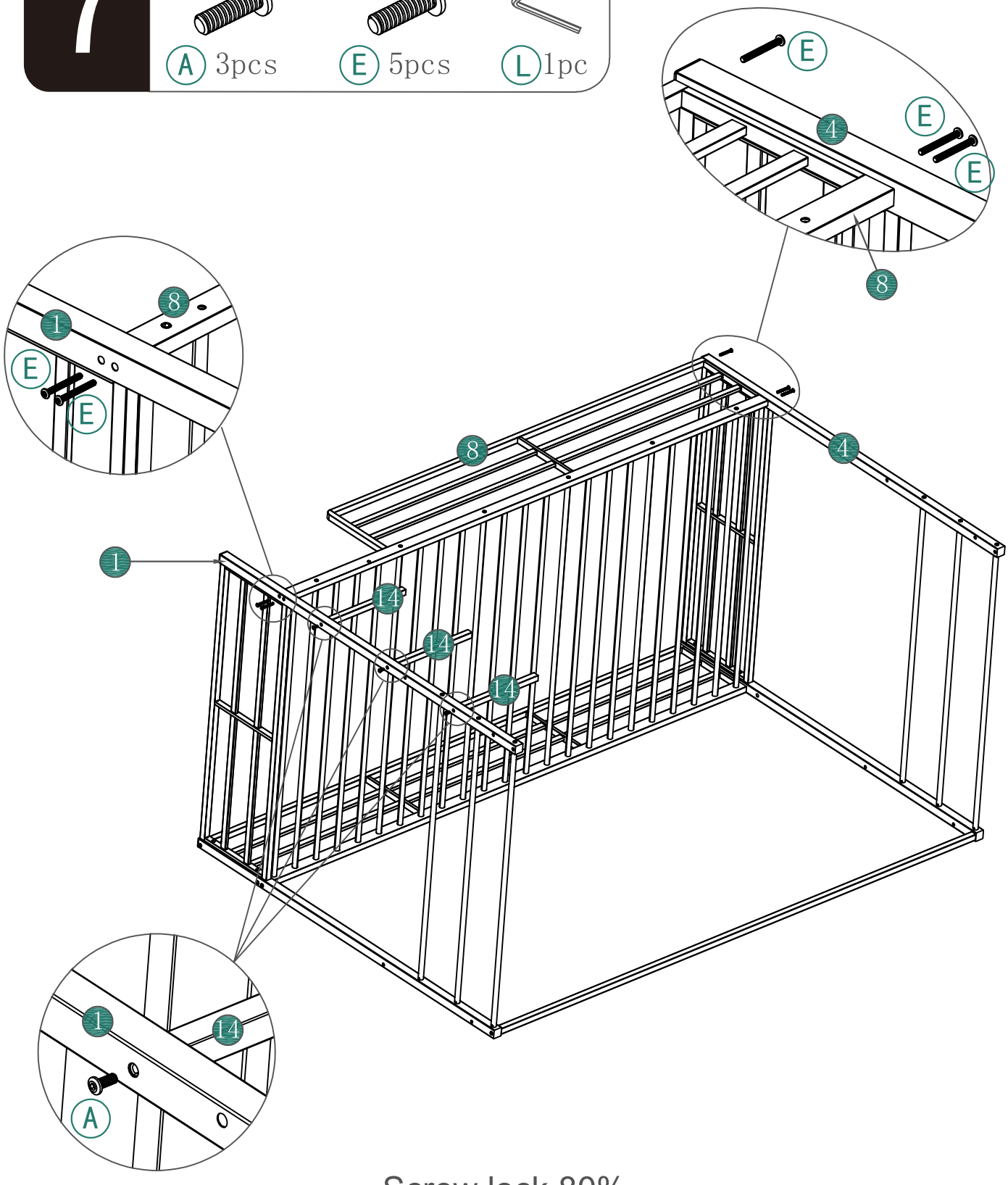


Screw lock 80%

# 8

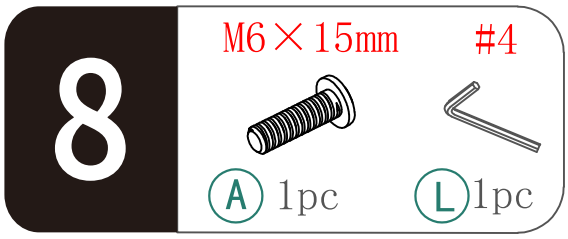


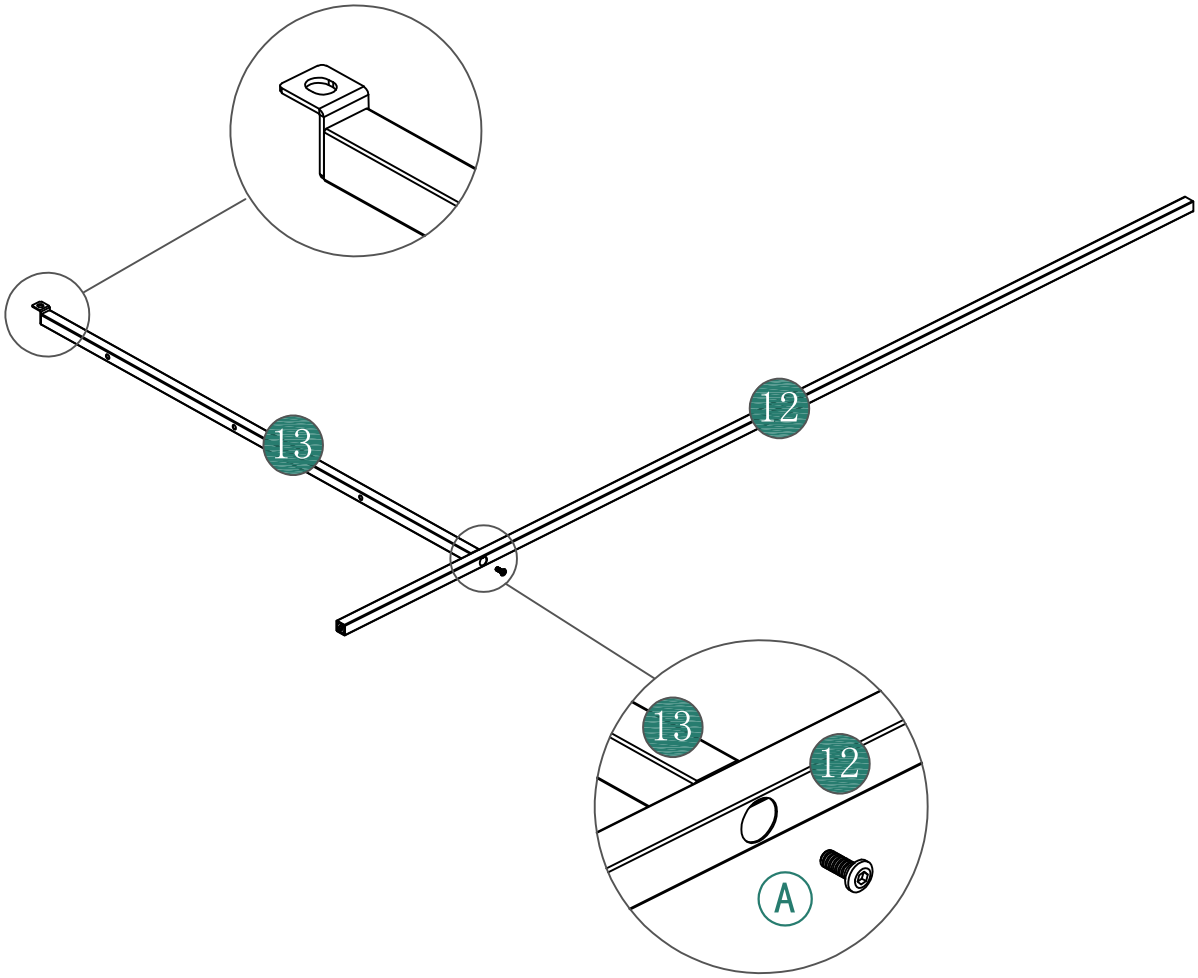


Screw lock 80%

# 9

| M6×15mm | M6×35mm | M6×45mm | #4 |
|---|---|---|---|
|  |  | 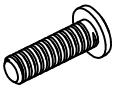 | 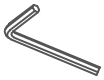 |
| A 1pc | D 3pcs | E 2pcs | L 1pc |

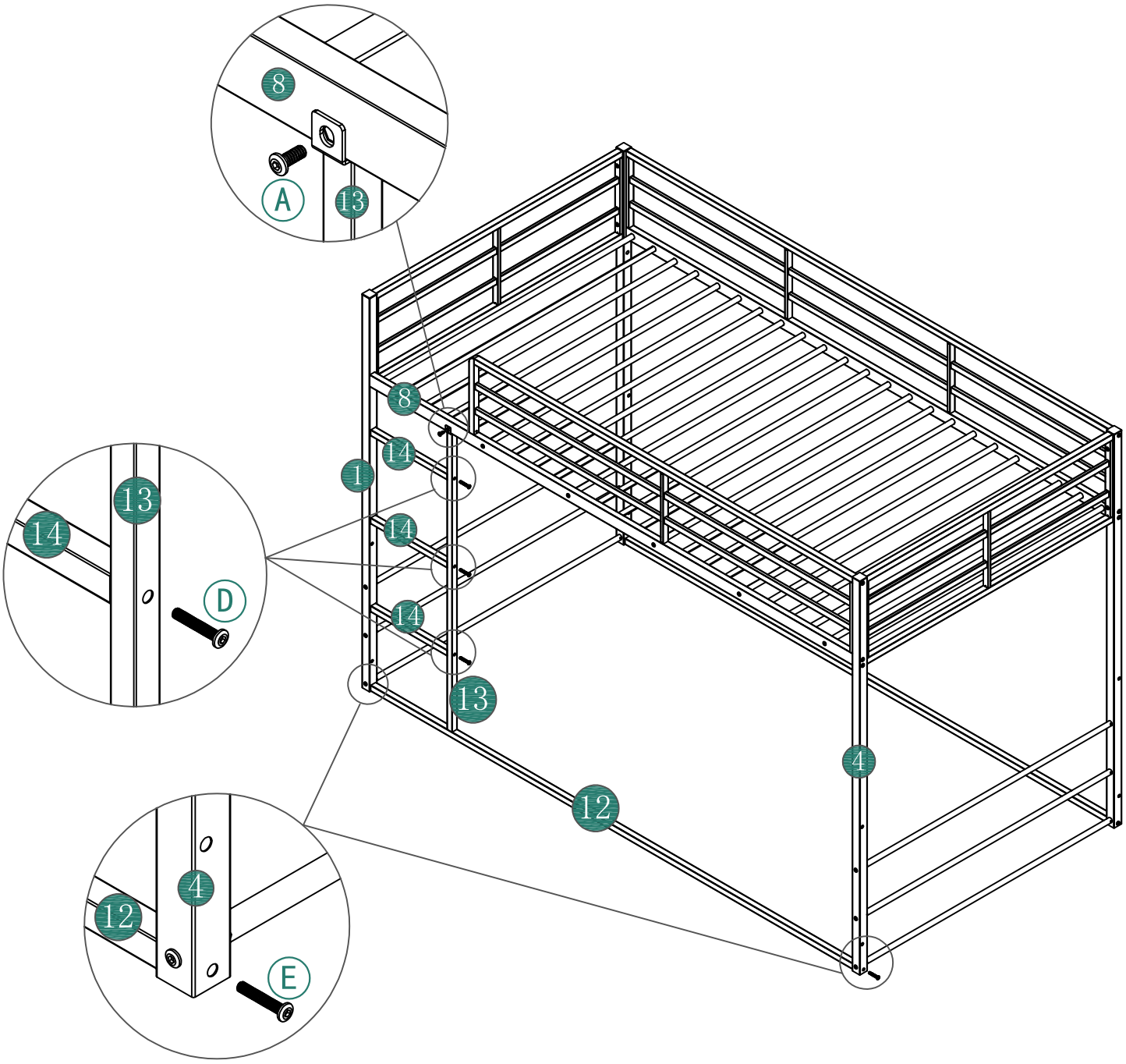


Screw lock 80%

# 10

| M6×15mm | M6×35mm | #4 |
| --- | --- | --- |
| Ⓐ 1pc | Ⓓ 5pcs | Ⓛ 1pc |

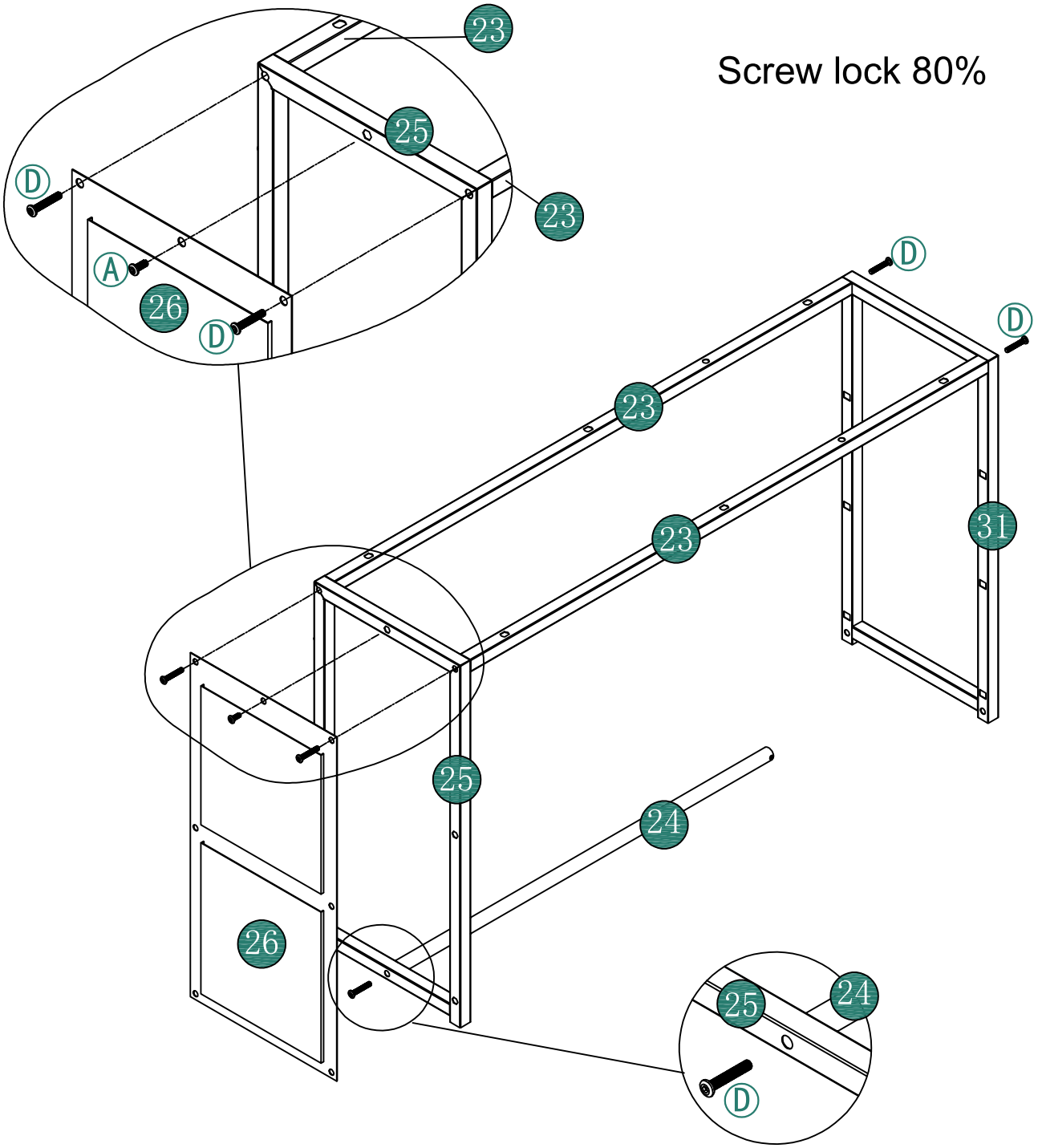

# 11

M6×35mm #4

D 3pcs L 1pc

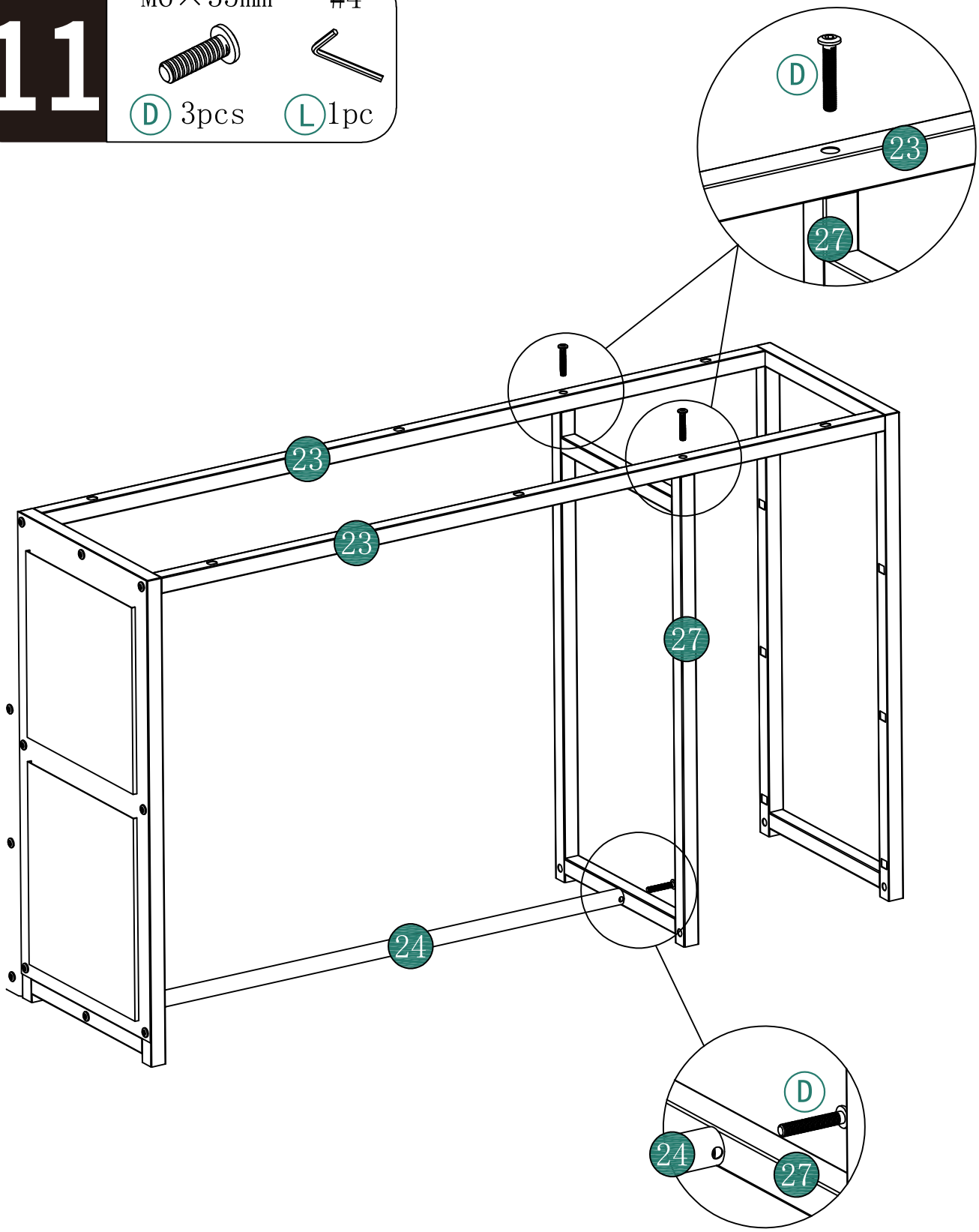


Screw lock 80%

# 12

M6×35mm #4

D 4pcs L 1pc

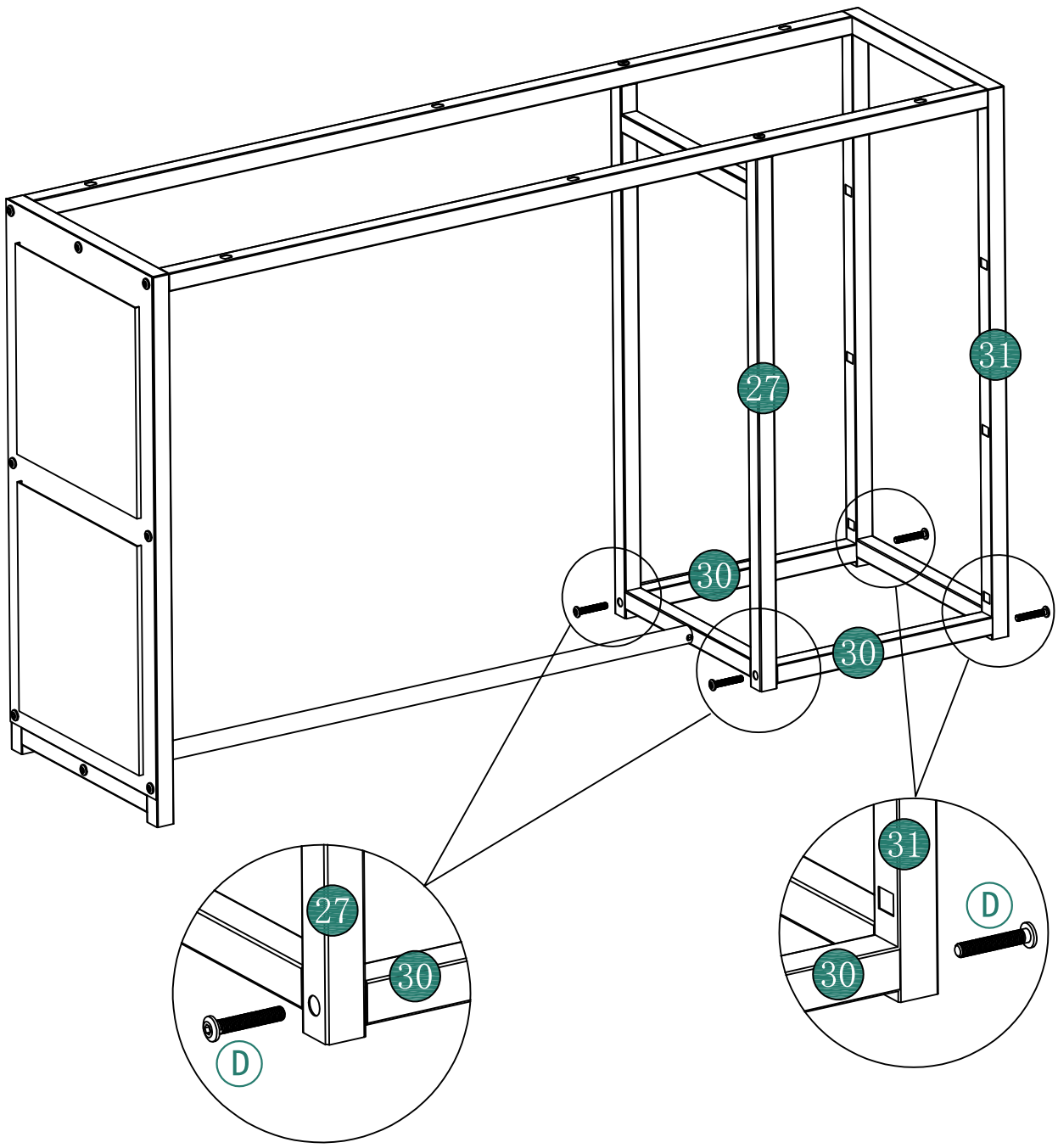


Screw lock 80%

# 13

M6×8×35mm

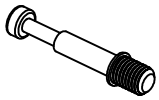

N 6pcs

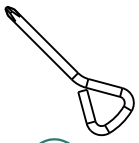

O 1pc

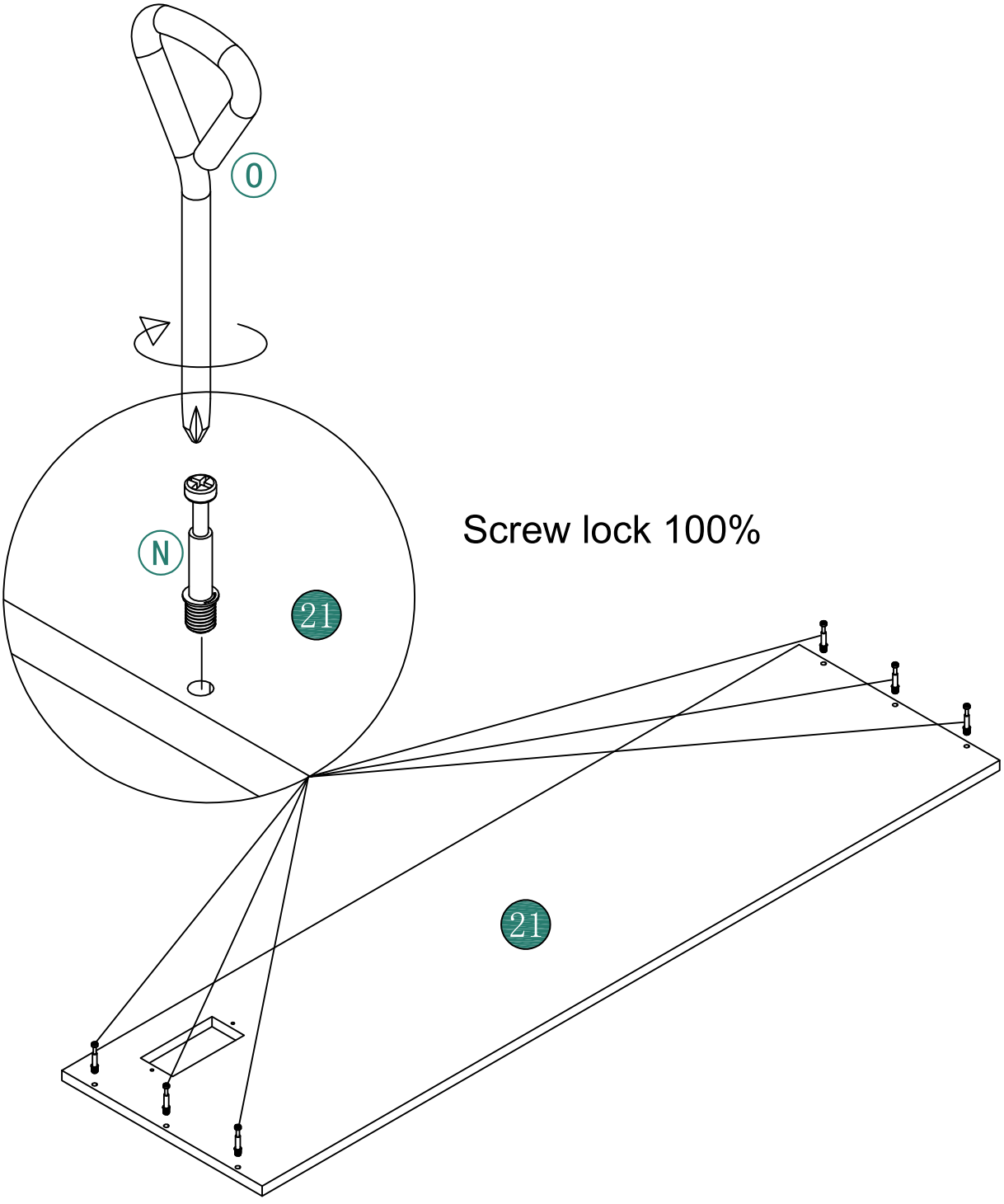

# 14

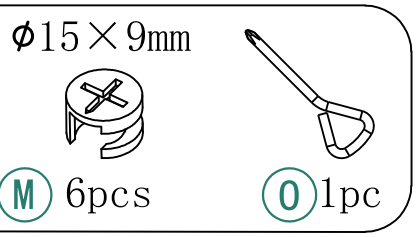


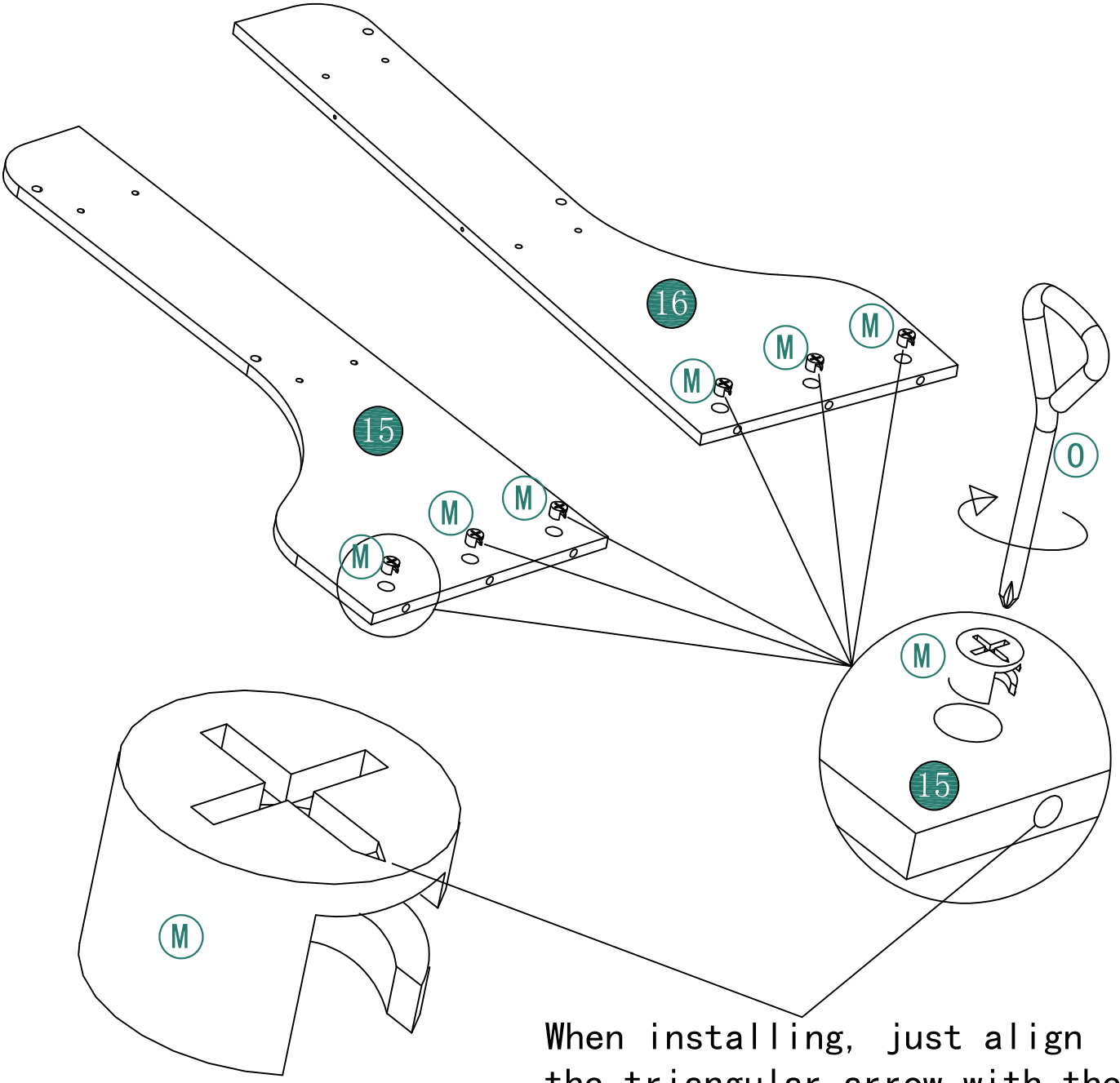


When installing, just align the triangular arrow with the bottom hole.

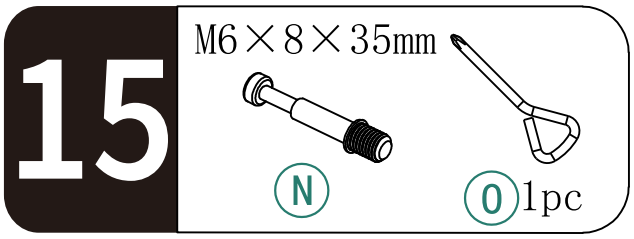


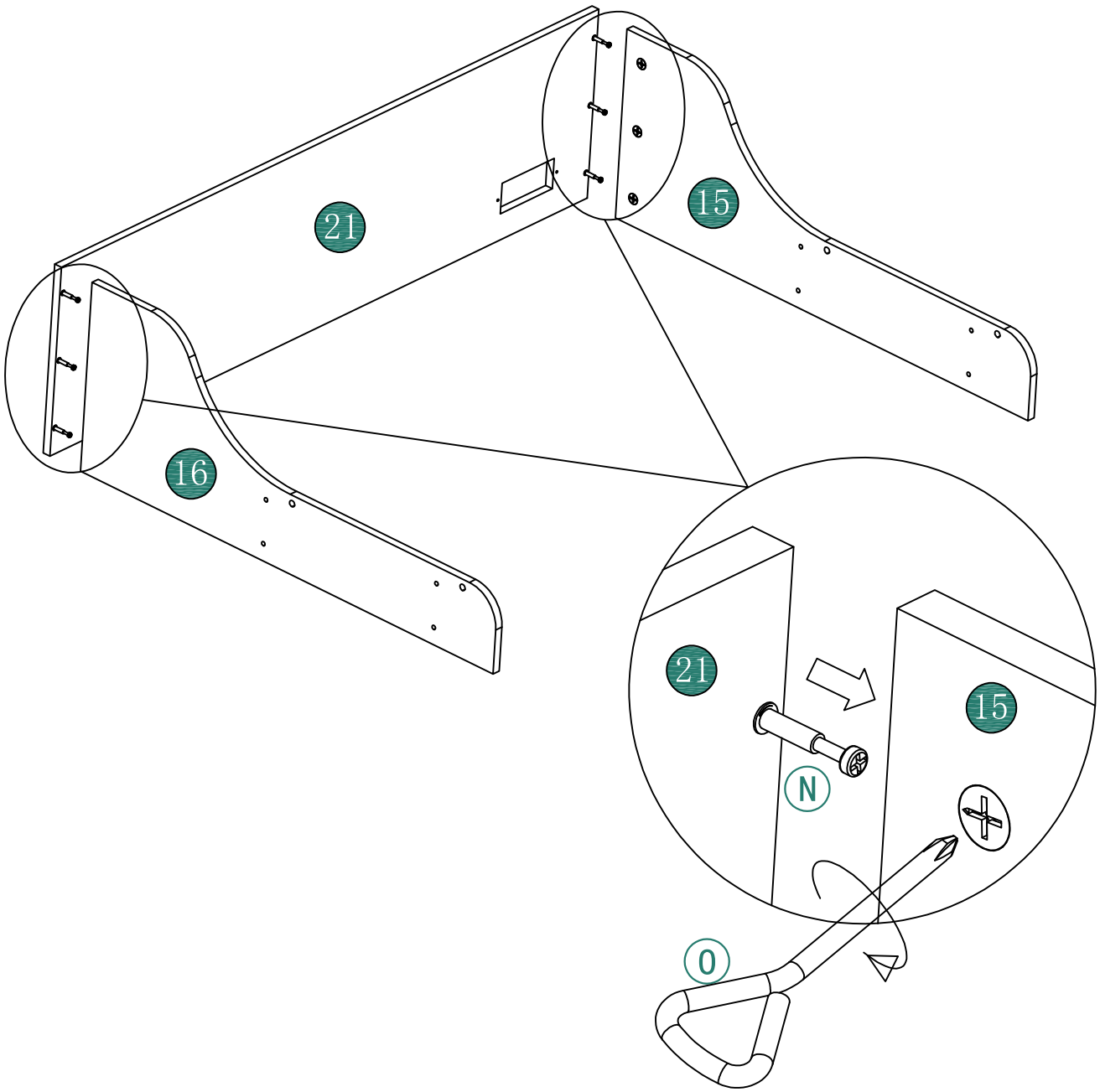


Insert screw N into holes 15 and 16, then use a screwdriver to turn it 180° as shown in the picture.

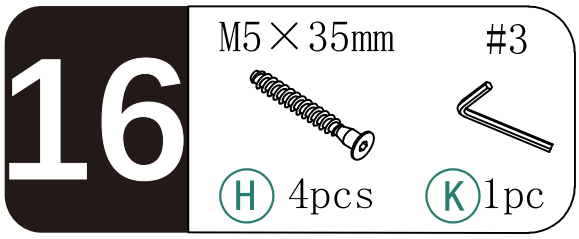


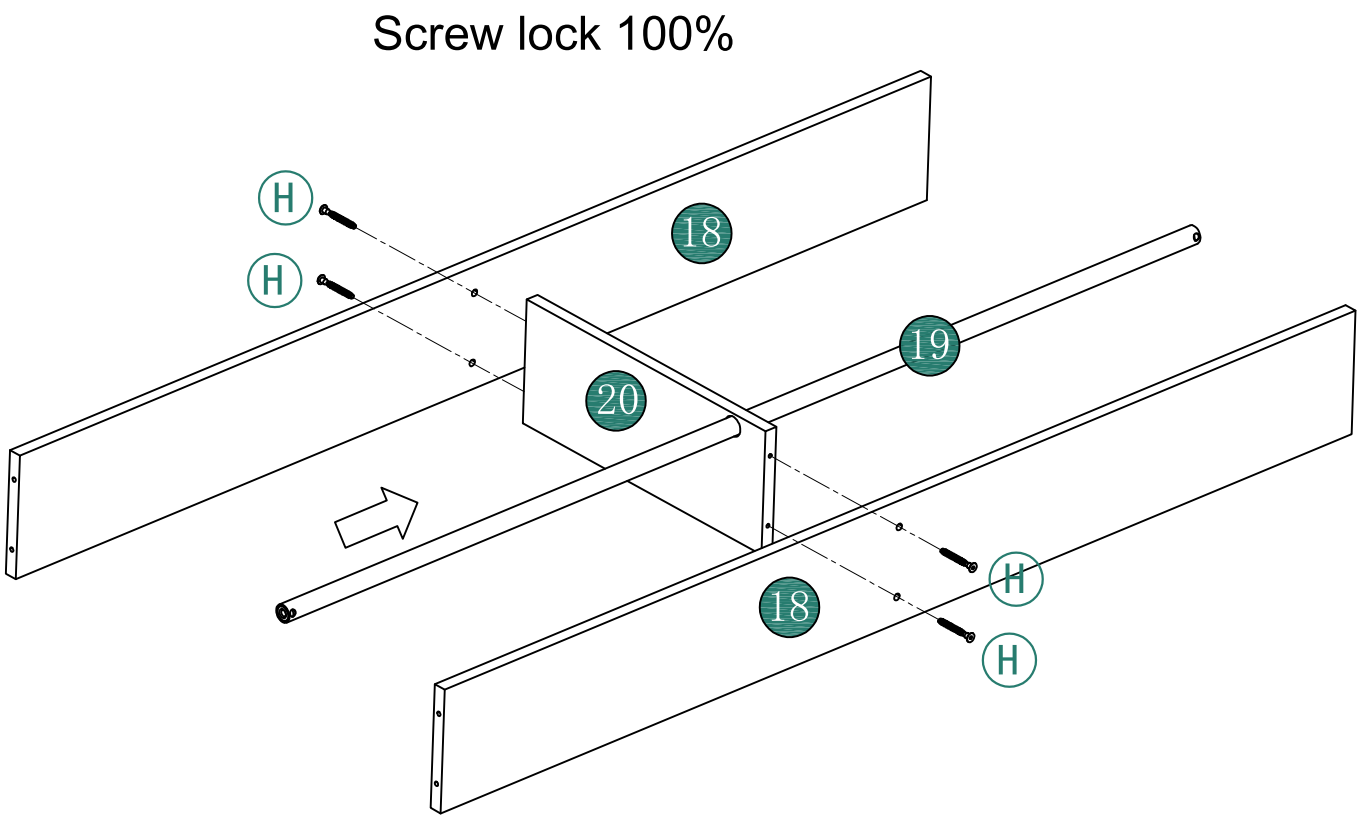


When installing, pay attention to the direction of the wooden board. After tightening the screws, just insert the No. 19 round tube into No. 20.

# 17

M5×35mm M6×25mm #3

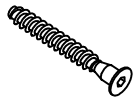



H 8pcs B 4pcs K 1pc

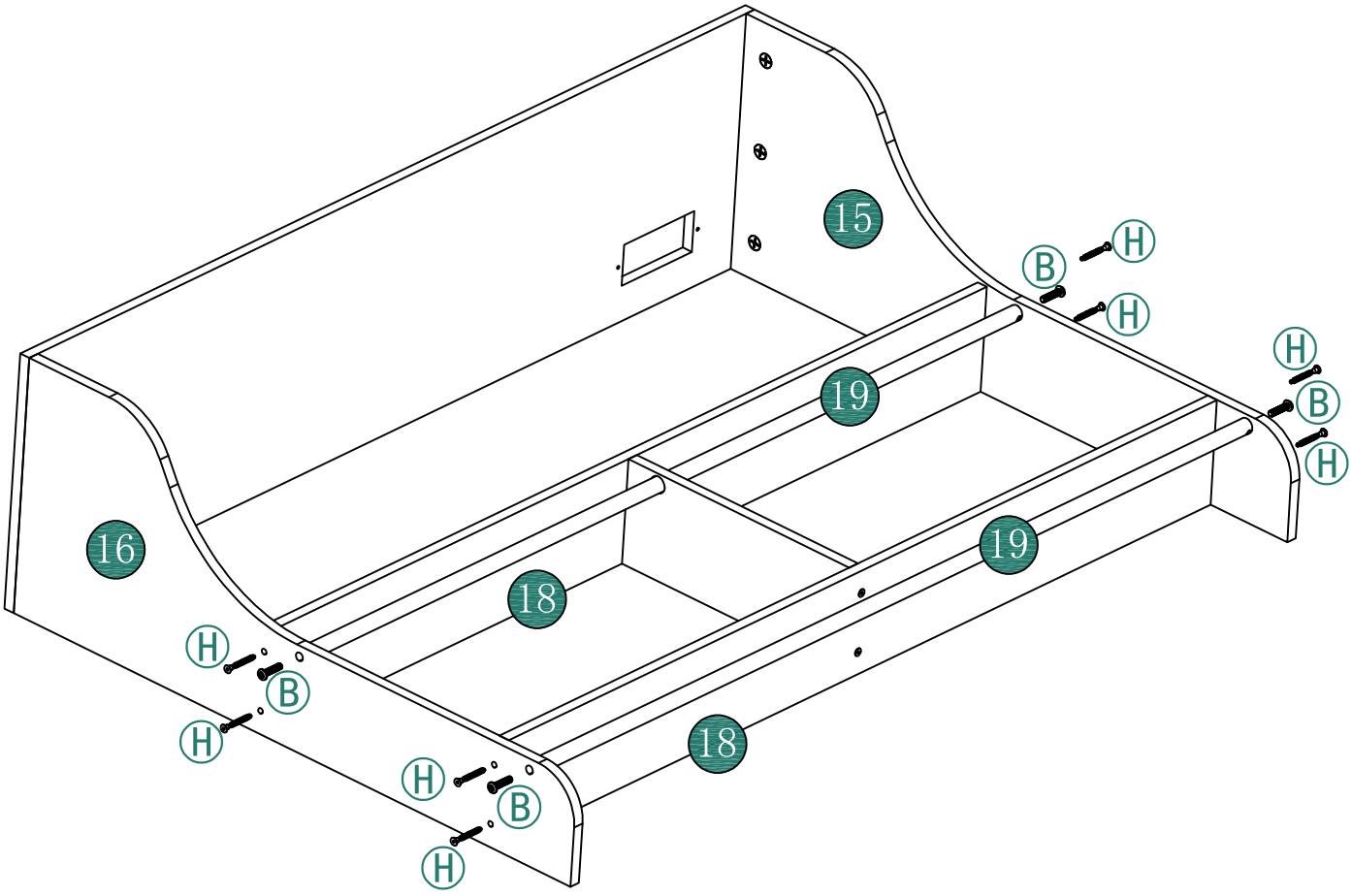


Screw lock 80%

# 18

M5×35mm

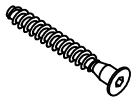

#3



H 14pcs

K 1pc

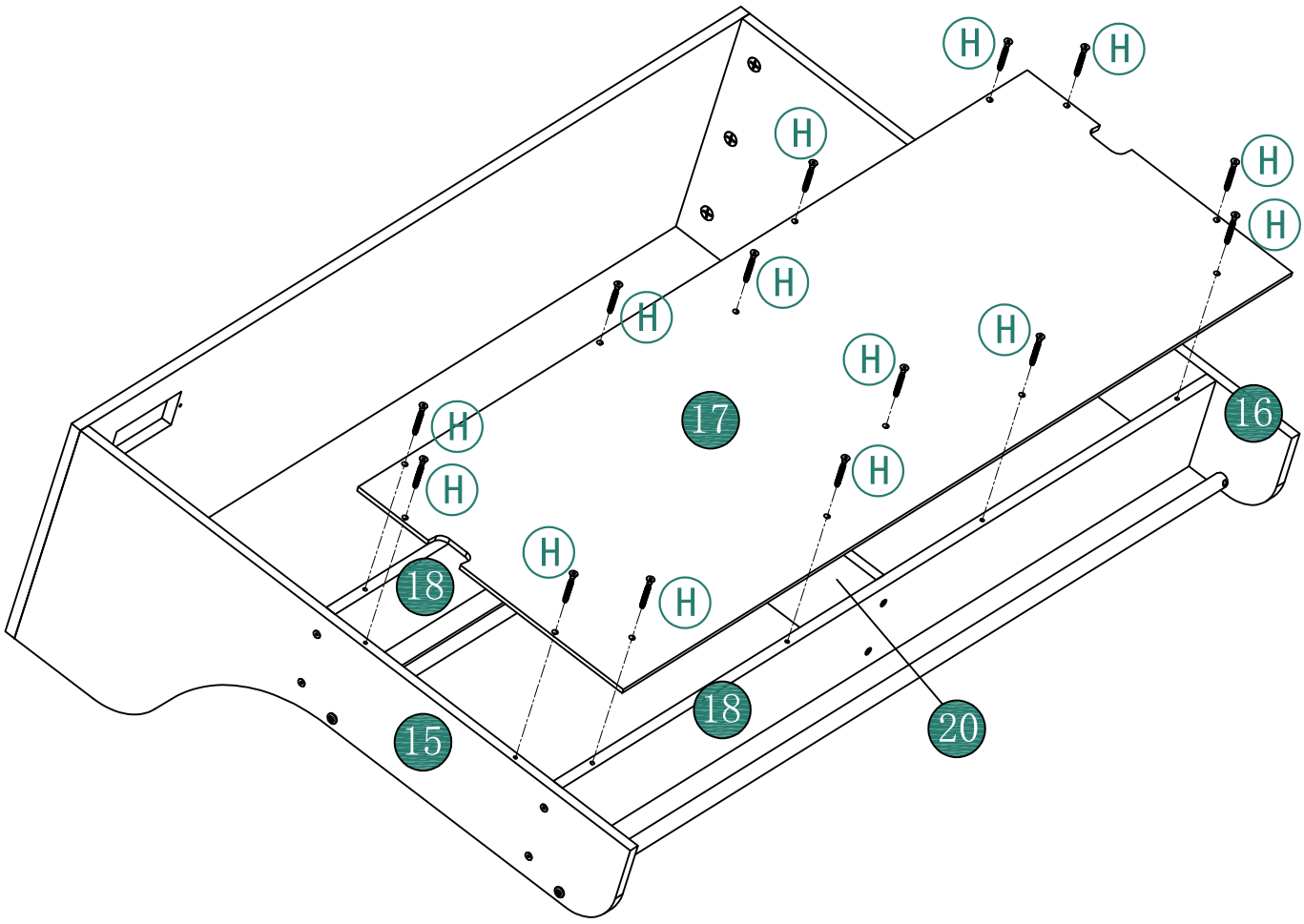


Screw lock 100%

# 19

M6×28mm #4





Ⓒ 6pcs Ⓛ 1pc

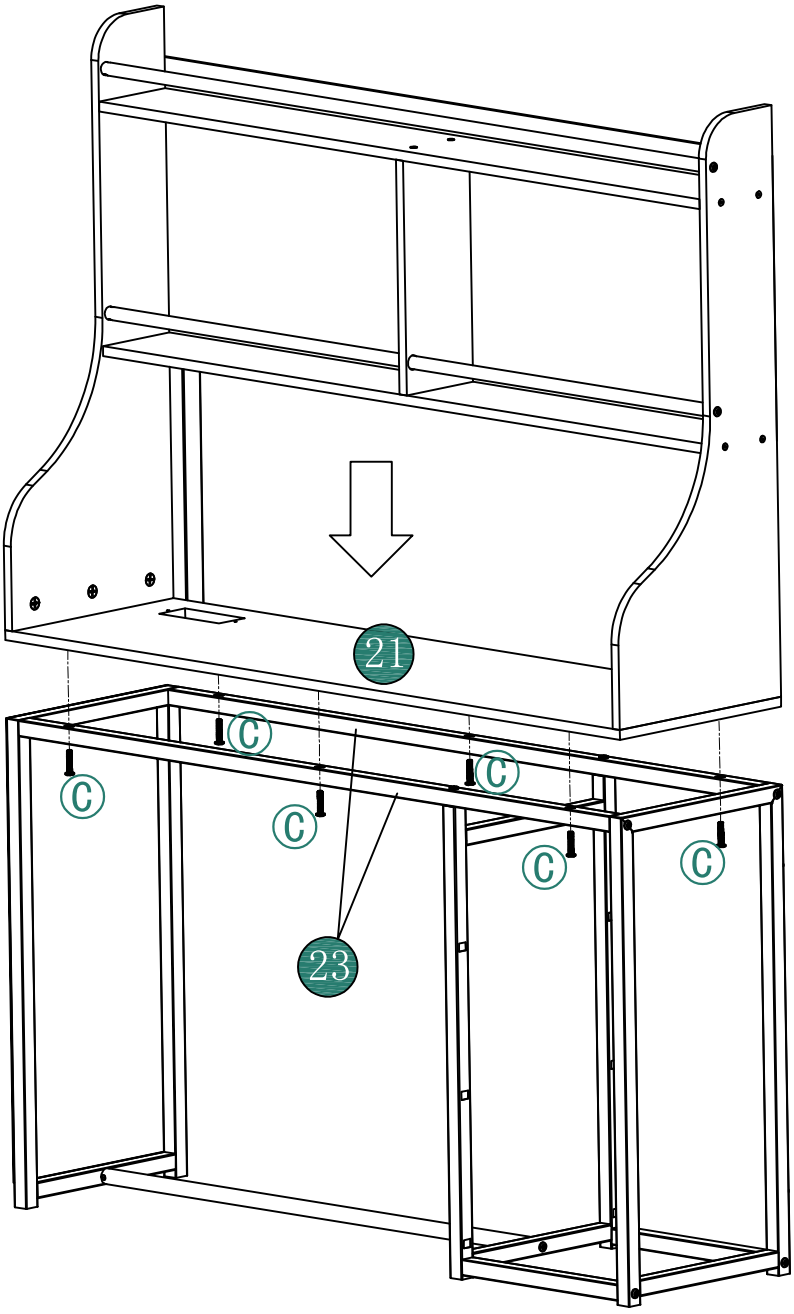


Screw lock 100%

# 20

st4×8mm

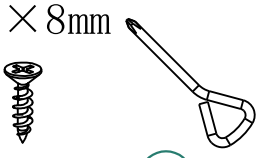

G 2pcs

O 1pc

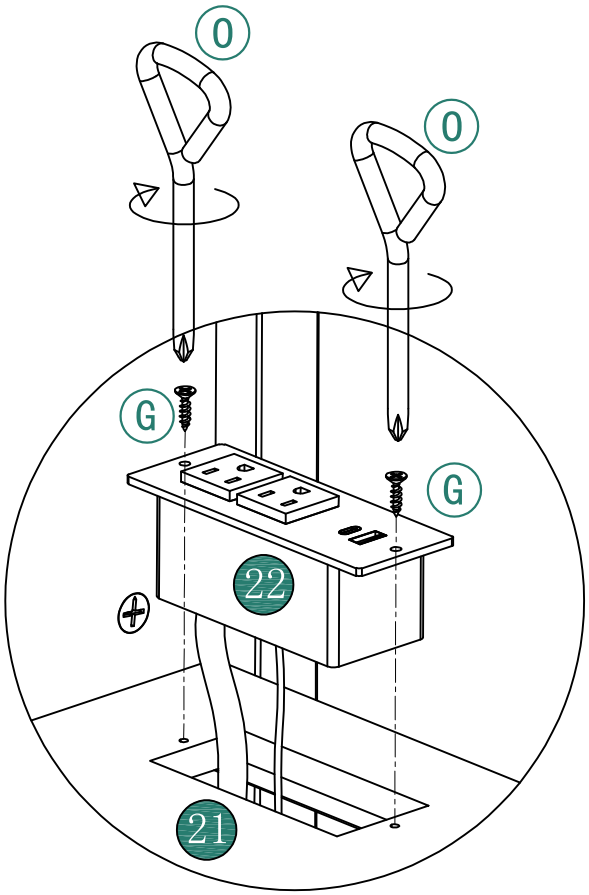


Screw lock 100%

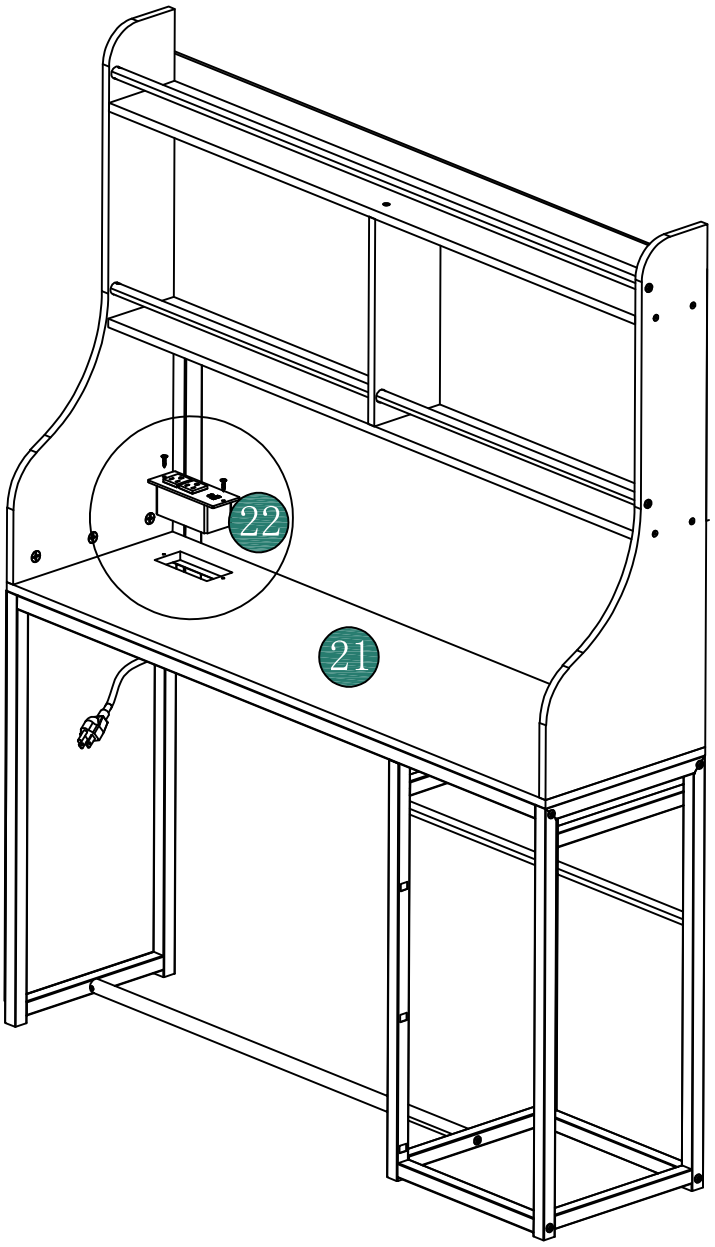

# 21

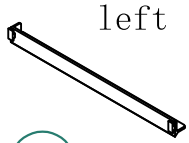


28 3pcs

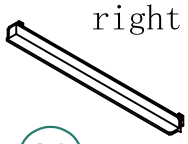


29 3pcs

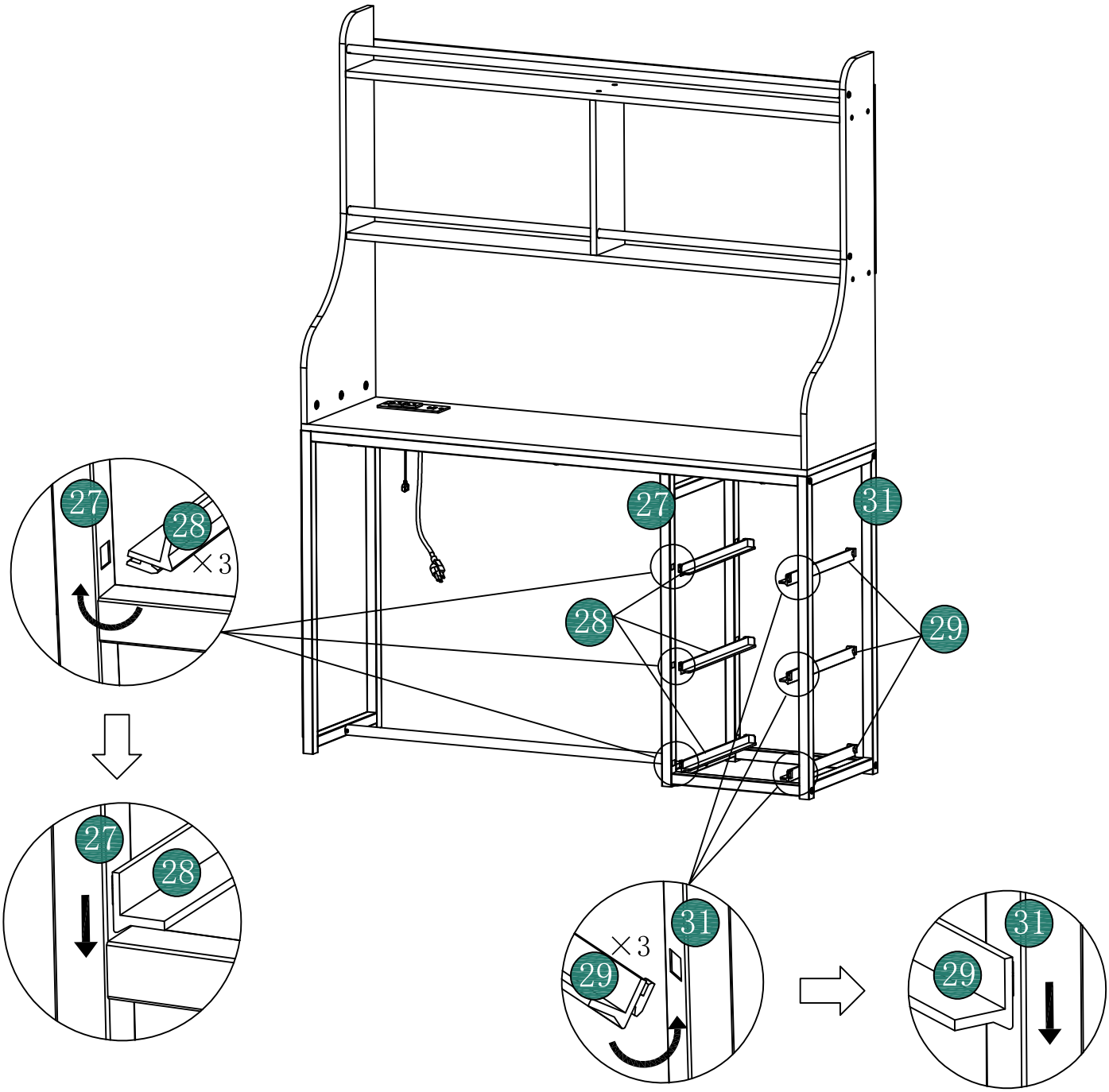

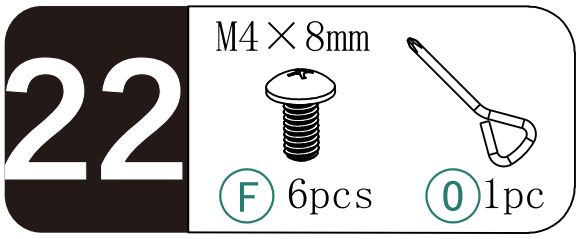


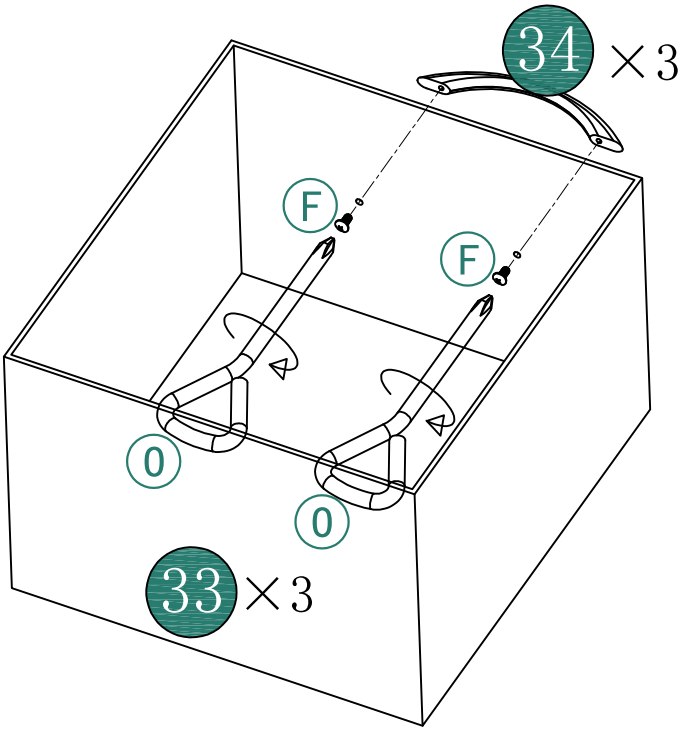


Screw lock 100%

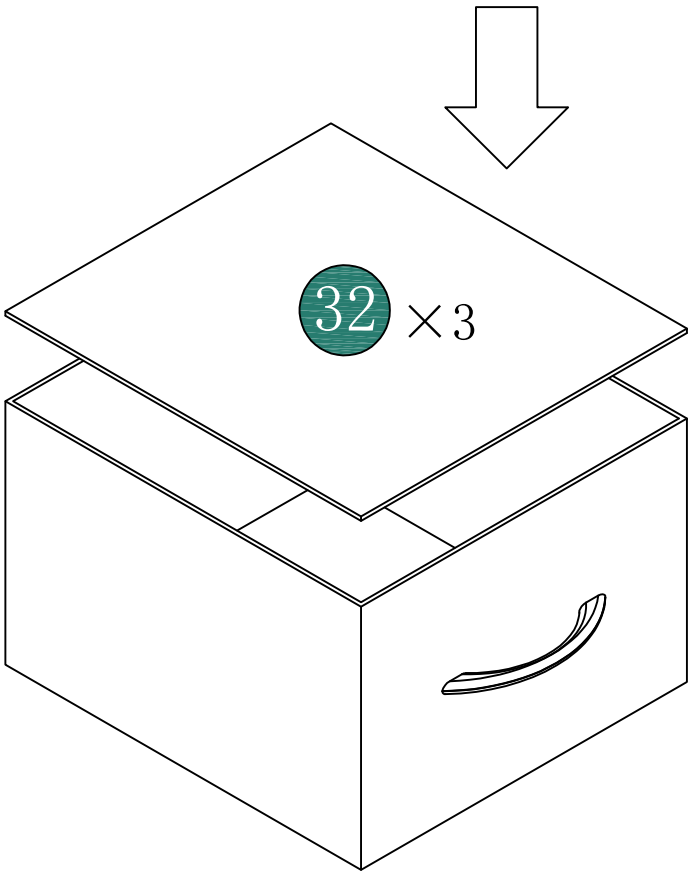

# 23

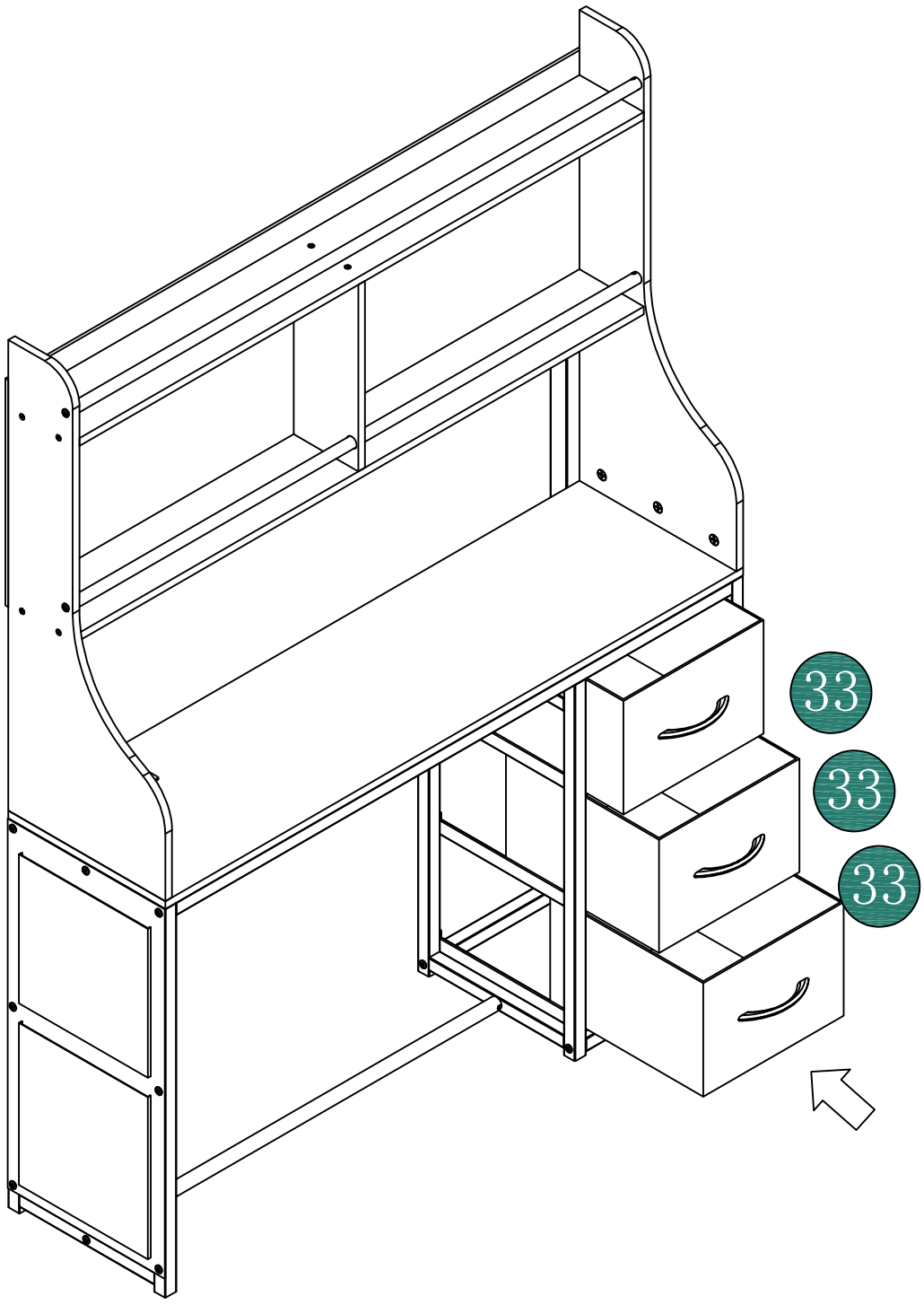


Push the assembled drawer in the direction of the arrow.

# 24

M6×45mm



E 4pcs

#4



L 1pc

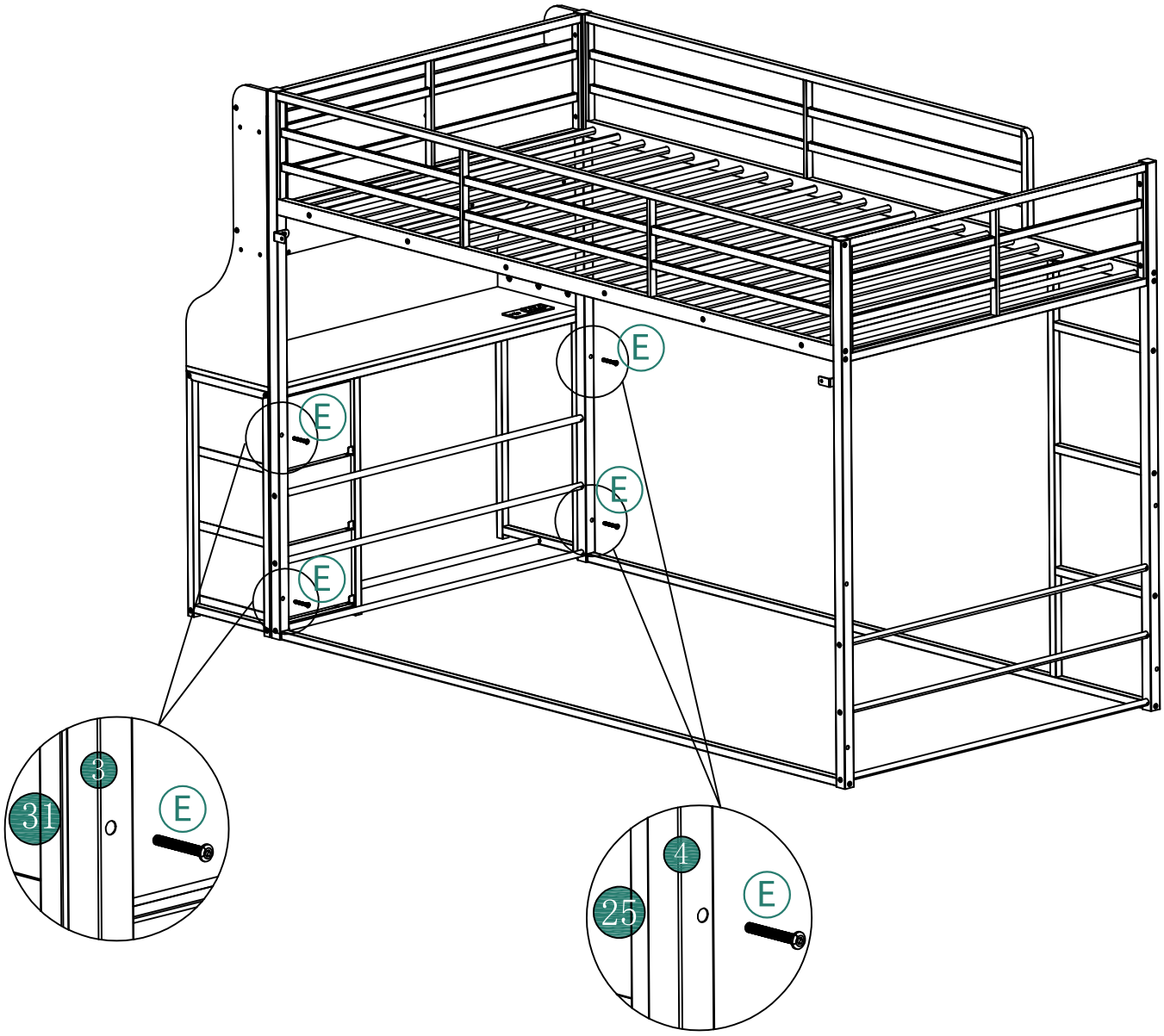


Screw lock 100%

# 25

LED strip



35 1pc

LED strip with clips

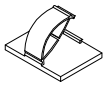

8pcs

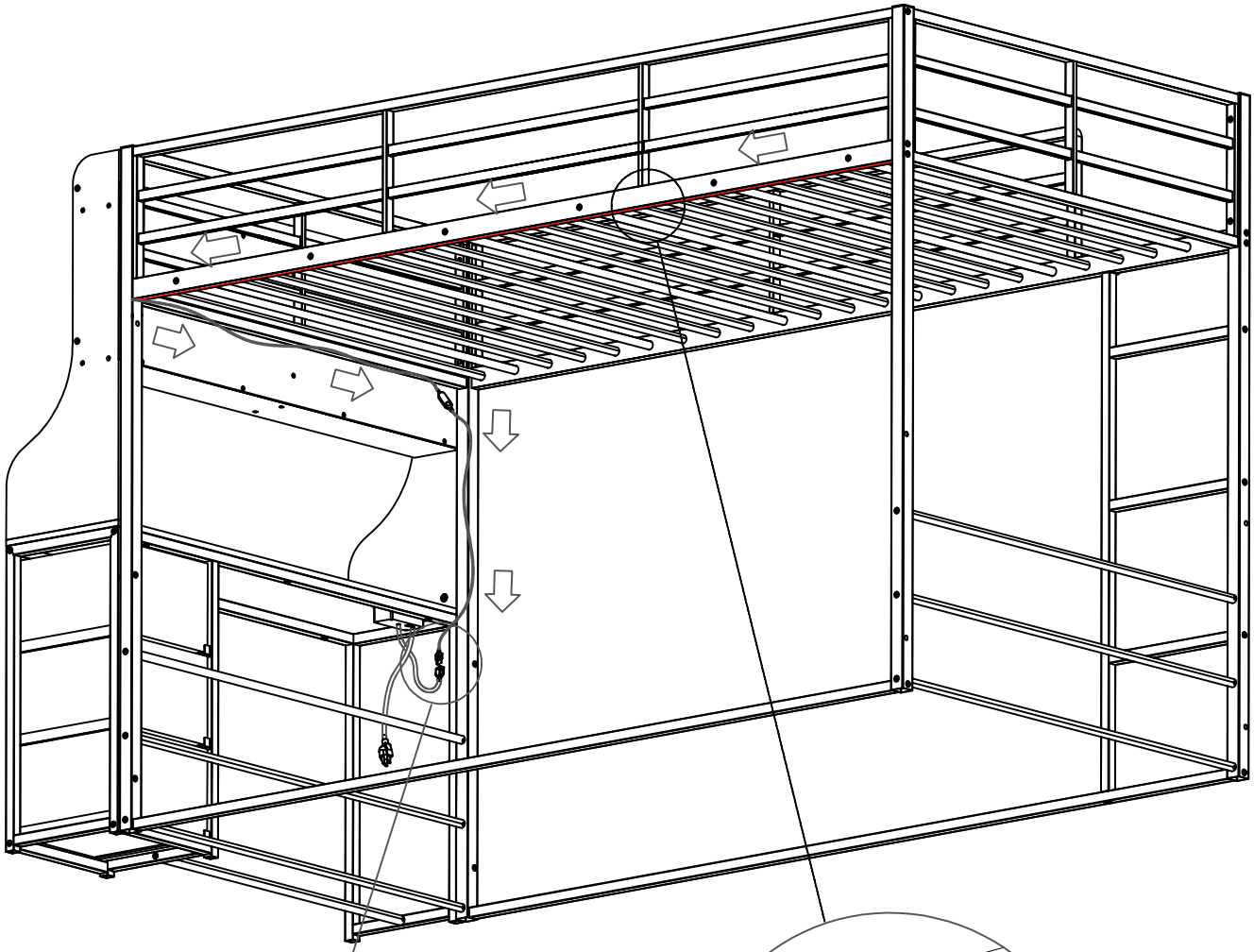

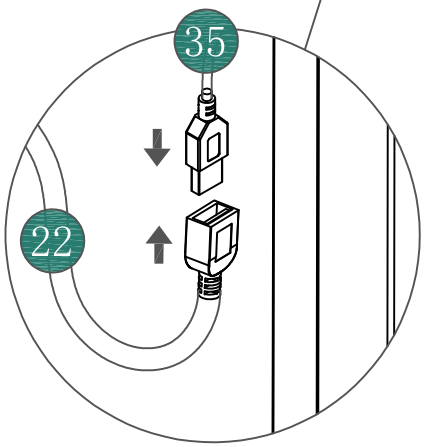


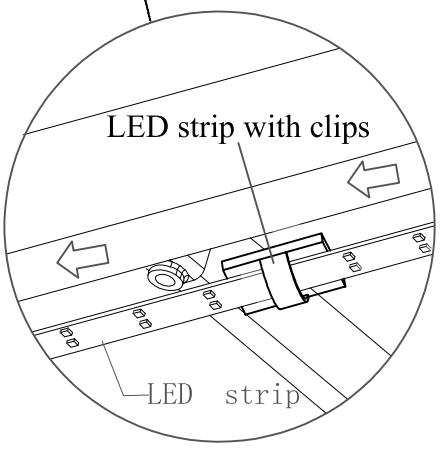

# 26

M6×15mm #4



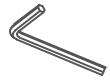

A 2pcs L 1pc

All the screws are 100% tightened.

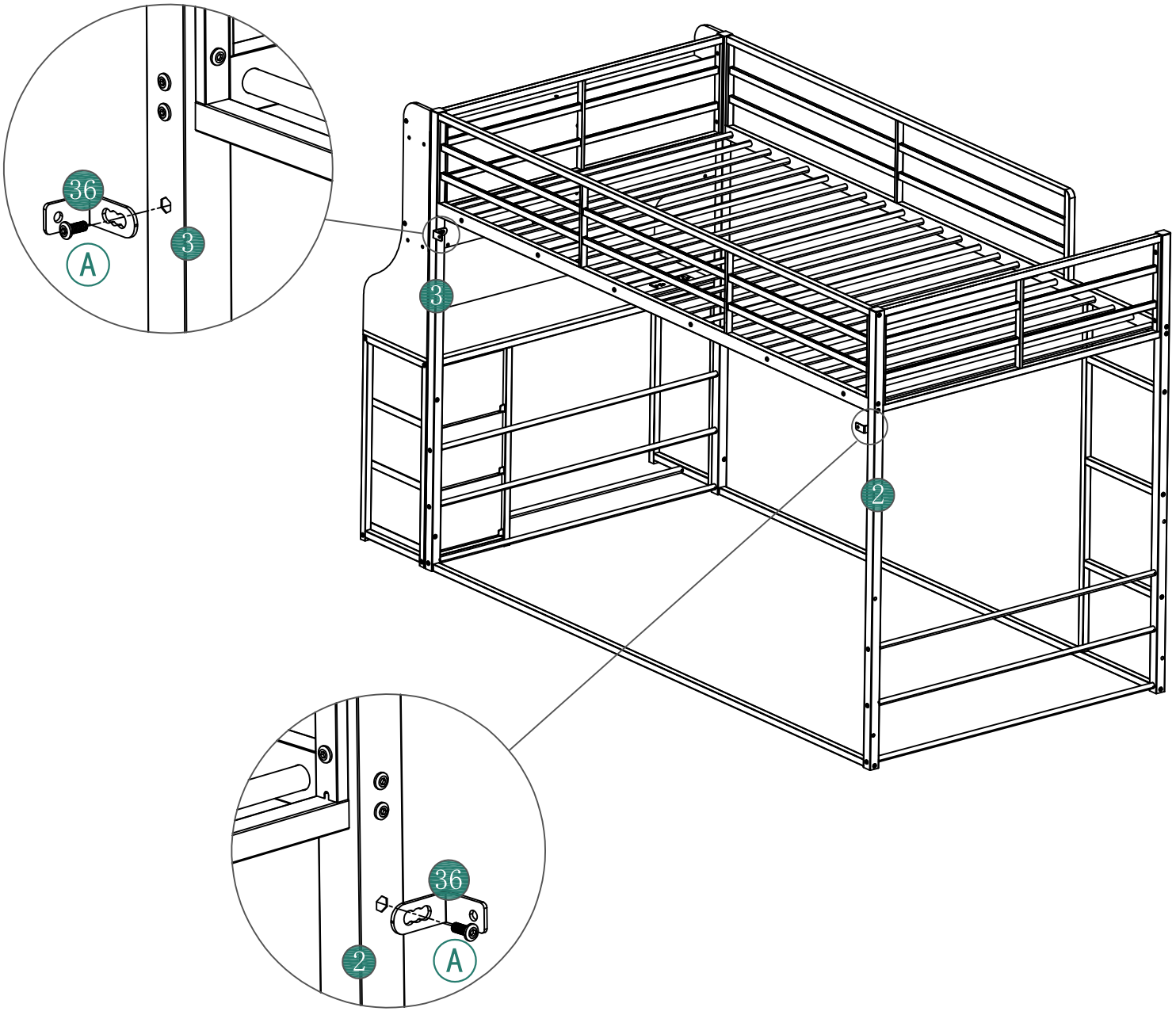

# 27

M6×50mm

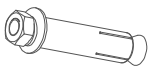

I 2pcs

10#, 13#

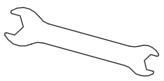

J 1pc

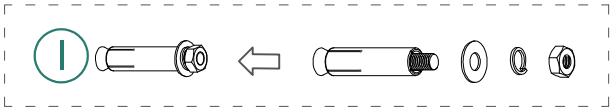


Step1:Mark the drilling positions on the wall with a pen.

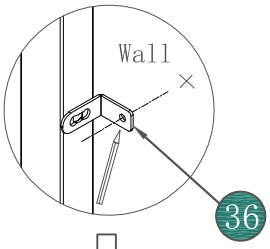


Step2:Drill holes using an electric drill for 10×40mm.

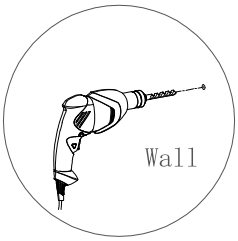


Step3:Use a hammer to drive screw into the wall.

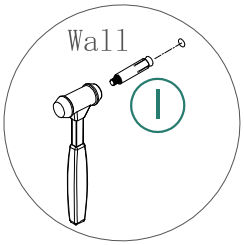


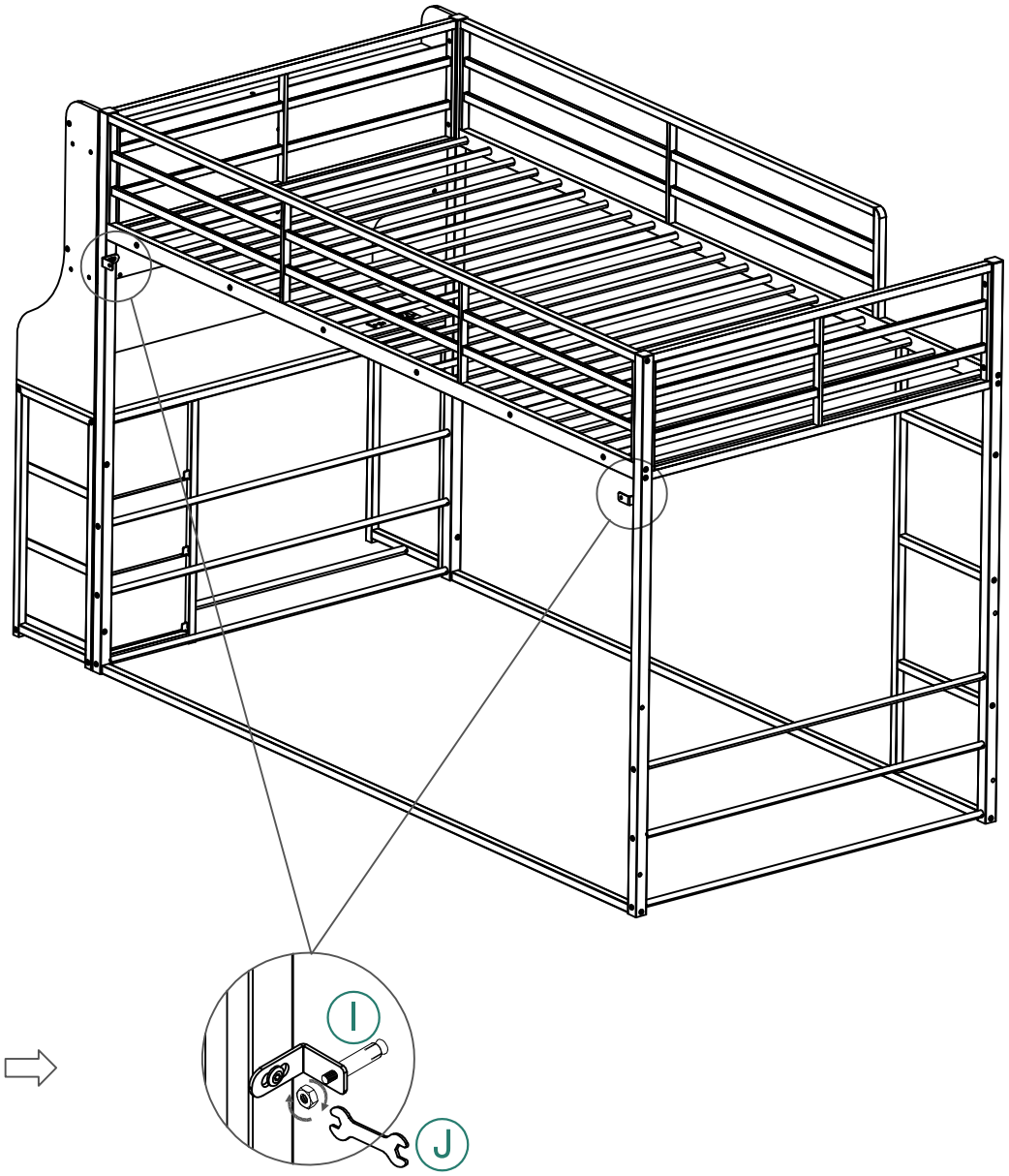


Screw lock 100%

# HELP CENTER

 Inquiry  Assembly issue  Missing parts  Returns&Refunds

If you encounter any difficulties during assembly, please contact us.support@fusou.vip
Wenn Sie während der Montage auf Schwierigkeiten stoßen, kontaktieren Sie uns bitte.
support@fusou.vip
Si vous rencontrez des difficultés lors du montage, veuillez nous contacter.support@fuso
u.vip
Se incontri difficoltà durante il montaggio, ti preghiamo di contattarci.support@fusou.vip
Si encuentras alguna dificultad durante el ensamblaje, por favor contáctanos.support@fuso
u.vip

# DISCLAIMER

Manufacturer and seller expressly disclaim any and all liability for personal injury, property damage or loss, whether direct, indirect, or incidental, resulting from the incorrect attach ment, improper use, inadequate maintenance, unapproved modification, or neglect of this product.

Der Hersteller und Verkäufer lehnen ausdrücklich jegliche Haftung für Personenschäden, Sach schäden oder Verluste ab, egal ob direkt, indirekt oder zufällig, die durch falsche Anbringung, unsachgemäßen Gebrauch, unzureichende Wartung, nicht genehmigte Änderungen oder Vernachlässigung dieses Produkts entstehen.

El fabricante y vendedor renuncian expresamente a toda responsabilidad por lesiones perso nales, daños materiales o pérdidas, ya sean directos, indirectos o incidentales, derivados de la incorrecta colocación, uso inadecuado, mantenimiento insuficiente, modificación no aprobada o negligencia de este producto.

Il produttore e il venditore declinano espressamente ogni responsabilità per lesioni personali, danni materiali o perdite, dirette, indirette o incidentali, derivanti dall'errato fissaggio, uso improprio, manutenzione inadeguata, modifica non autorizzata o negligenza di questo prodotto.

Le fabricant et le vendeur déclinent expressément toute responsabilité en cas de blessures corporelles, de dommages matériels ou de pertes, qu'ils soient directs, indirects ou accessoires, résultant de la fixation incorrecte, de l'utilisation inappropriée, de l'entretien insuffisant, de la modification non approuvée ou de la négligence de ce produit.